CONDITIONAL ZONING PLANS

OF

CHAPEL HILL CROSSING

CHAPEL HILL, NORTH CAROLINA

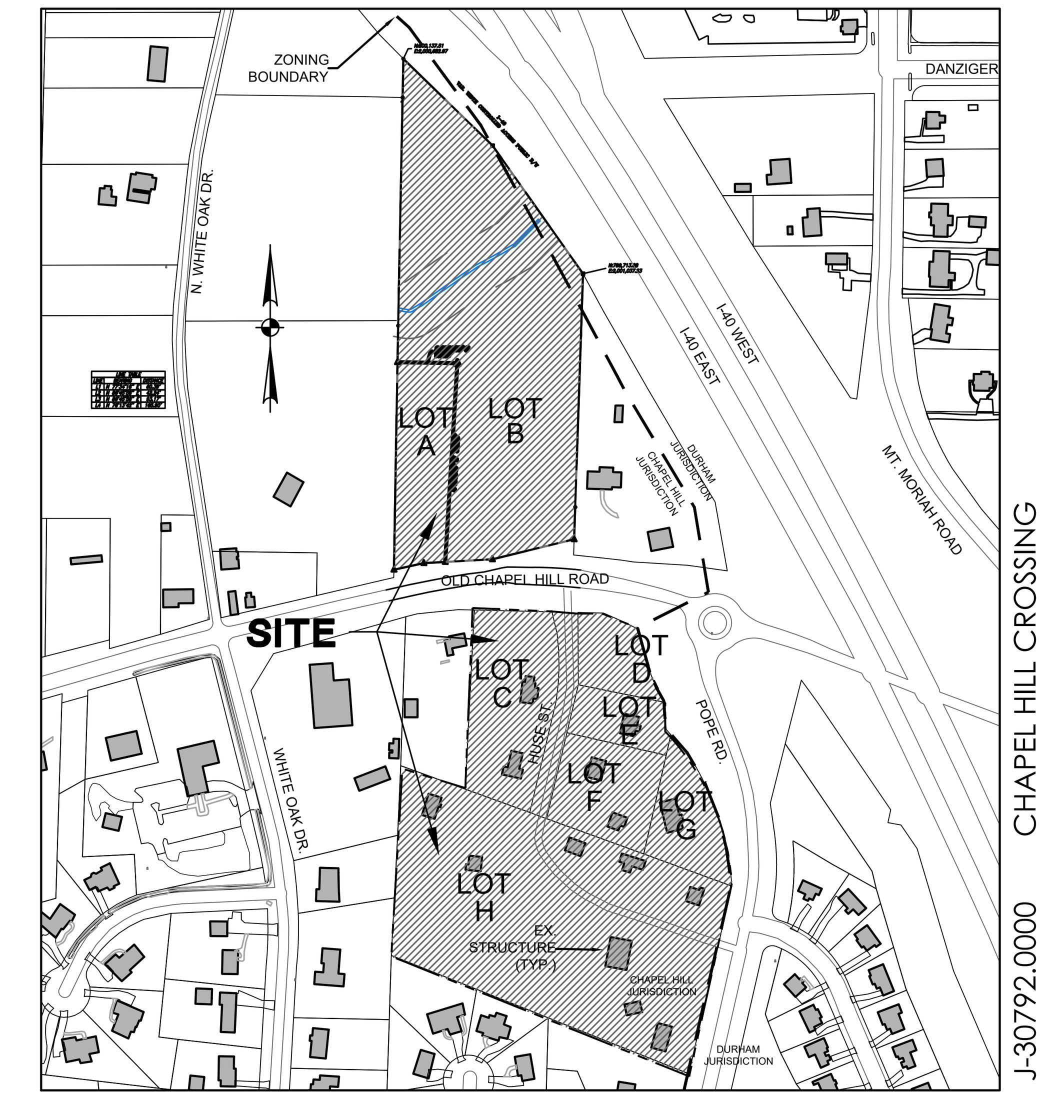

VICINITY MAP
SCALE: 1" = 300'

PREPARED FOR:

E B CAPITAL PARTNERS

100 SILERS FEN COURT
CHAPEL HILL, NC 27517

APRIL 5, 2023

CONTRACT PURCHASER / CLIENT:

E B CAPITAL PARTNERS
100 SILERS FEN COURT
CHAPEL HILL, NC 27517
205-586-3062
CONTACT: ERNIE BROWN

APPLICANT / CONSULTANT:

LANDSCAPE ARCHITECT / LAND PLANNER:
THOMAS & HUTTON
111 WEST MAIN STREET
DURHAM, NC 27701
919-682-0368
CONTACT: WENDI RAMSDEN

CIVIL ENGINEER:

CIVIL ENGINEER:
THOMAS & HUTTON
111 WEST MAIN STREET
DURHAM, NC 27701
919-682-0368
CONTACT: ANDREW M. OAKLEY

REVISION HISTORY

REV. NO.	REVISION	BY	DATE
####	####	####	####
####	####	####	####
####	####	####	####
####	####	####	####
####	####	####	####
####	####	####	####
####	####	####	####
####	####	####	####
####	####	####	####

SUBMITTAL HISTORY

SUBMITTED TO THE TOWN OF CHAPEL HILL, NC	DATE
####	####
####	####
####	####
####	####
####	####
####	####
####	####
CONDITIONAL ZONING RESUBMITTAL W REVISIONS	4-5-23
CONDITIONAL ZONING SUBMITTAL #1	2-10-23

SITE DATA NORTH SIDE:

TOTAL SURVEYED AREA:	283,779 SF / 6.51 AC
LAND USE:	
EXISTING	SINGLE FAMILY RESIDENTIAL
PROPOSED	MULTI-FAMILY RESIDENTIAL
ZONING:	
PROPOSED	R-1 REZONED TO R-6-CZD
EXISTING BUILDINGS:	2,727 SF IN FOUR ONE STORY BUILDINGS TO BE REMOVED
PROPOSED BUILDINGS:	MULTI-FAMILY RESIDENTIAL 4 STORIES AT STREET, 5 STORIES BEHIND
IMPERVIOUS SURFACE:	
EXISTING	6,578 SF / 0.15 AC (2.3%)
PROPOSED	127,343 SF / 2.92 AC (45%)

SITE DATA SOUTH SIDE:

TOTAL SURVEYED AREA:	426,215 SF / 9.78 AC
LAND USE:	
EXISTING	SINGLE FAMILY RESIDENTIAL
PROPOSED	MULTI-FAMILY RESIDENTIAL, SINGLE FAMILY RESIDENTIAL, RETAIL
ZONING:	
PROPOSED	R-1 REZONED TO MU-V-CZD
EXISTING BUILDINGS:	12,973 SF IN THIRTEEN ONE STORY BUILDINGS TO BE REMOVED
PROPOSED BUILDINGS:	2-7 STORIES RESIDENTIAL, OFFICE, RETAIL, FLEX RETAIL/RESTAURANT/OFFICE COMMERCIAL REREATION
IMPERVIOUS SURFACE:	
EXISTING	52,185 SF / 1.20 AC (12.2%)
PROPOSED	299,170 SF / 6.87 AC (68%)

NOTE: ADDITIONAL PROJECT DATA DETAILED ON SHEET G0.1

LOT DATA

	LOT A	LOT B	LOT C	LOT D
SITE ADDRESS:	5500 OLD CHAPEL HILL RD. DURHAM, NC 27707	5502 OLD CHAPEL HILL RD. DURHAM, NC 27707	5503 OLD CHAPEL HILL RD. DURHAM, NC 27707	99 HUSE STREET DURHAM, NC 27707
OWNER(S):	BENFORADO TERRI	BENFORADO TERRI	HUSE STREET PROPERTIES LLC	HUSE STREET PROPERTIES LLC
PIN:	0709-09-73-2515	0709-09-86-5111	0709-08-88-9647	0709-18-09-9567
PARCEL ID:	140196	140195	140265	140262
ACREAGE:	43,586 SF / 1.001 AC	240,096 SF / 5.512 AC	59,864 SF / 1.37 (GIS)	19,955 SF / 0.46 AC (GIS)
DEED BOOK:	DB 8775, PG 160	DB 8775, PG 163	DB 7160, PG 286	DB 7160, PG 286
PLAT BOOK:	PB 63, PG 58	PB 18A, PG 111	PB 318, PG 688	PB N/A

	LOT E	LOT F	LOT G	LOT H
SITE ADDRESS:	101 HUSE ST. DURHAM, NC 27707	103 HUSE ST. DURHAM, NC 27707	113 HUSE ST. DURHAM, NC 27707	106 HUSE ST. DURHAM, NC 27707
OWNER(S):	HUSE STREET PROPERTIES LLC	HUSE STREET PROPERTIES LLC	HUSE STREET PROPERTIES LLC	HUSE STREET PROPERTIES LLC
PIN:	0709-18-18-1304	0709-18-06-8944	0709-18-26-4324	0709-08-94-8411
PARCEL ID:	140263	140264	140261	140260
ACREAGE:	18,896 SF / 0.43 AC (GIS)	37,365 SF / 0.86 AC (GIS)	28,064 SF / 0.64 AC (GIS)	242,669 SF / 5.57 AC (GIS)
DEED BOOK:	DB 7160, PG 286	DB 7160, PG 286	DB 7160, PG 286	DB 7160, PG 294
PLAT BOOK:	PB 318, PG 688	PB 318, PG 688	PB 6A, PG 67	PB 178, PG 18

PRELIMINARY - NOT FOR CONSTRUCTION

WENDI L. RAMSDEN 1302
4/5/23

PREPARED BY:

THOMAS & HUTTON

NC811.ORG
Know what's below. 811 before you dig.

THOMAS & HUTTON
111 West Main Street
Durham, NC 27701
p.919.682.0368
www.thomasandhutton.com

Sheet List Table	
Sheet Number	Sheet Title
C0	COVER SHEET
G0.1	SHEET INDEX - GENERAL NOTES - LEGEND
C0.1	AREA MAP - NORTH
C0.2	PHASING PLAN
D1.1	EXISTING CONDITIONS AND DEMOLITION PLAN
C1.1	SITE PLAN - OVERALL
C1.2	SITE PLAN - NORTH
C1.3	SITE PLAN - SOUTH
C2.1	WATER AND SEWER PLAN - OVERALL
C2.2	WATER AND SEWER PLAN - NORTH
C2.3	WATER AND SEWER PLAN - SOUTH
C2.4	NOT USED
C2.5	LIGHTING PLAN - OVERALL
C2.6	LIGHTING PLAN - NORTH
C2.7	LIGHTING PLAN - SOUTH
C2.8	LIGHTING DETAILS
C3.0	LANDSCAPE PROTECTION PLAN
C3.1	GRADING & DRAINAGE PLAN - OVERALL
C3.2	GRADING & DRAINAGE PLAN - NORTH
C3.3	GRADING & DRAINAGE PLAN - SOUTH
C3.4	SITE DETAILS
C3.5	SITE DETAILS
L1.1	LANDSCAPE PLAN - OVERALL
L1.2	LANDSCAPE PLAN - NORTH
L1.3	LANDSCAPE PLAN - SOUTH
L1.4	LANDSCAPE DETAILS
M1.1	CONSTRUCTION MANAGEMENT PLAN

RESOURCE CONSERVATION NOTES

STREAM BUFFERS:
THERE IS AN INTERMITTENT STREAM ON SITE, SHOWN WITH 50' RCD ON PLANS.

FLOODPLAIN PROTECTION:
THE SITE IS NOT IN AN AREA AFFECTED BY A MAPPED FLOODPLAIN ACCORDING TO FIRM MAP 3720070900K EFFECTIVE 10-19-18.

STEEP SLOPE PROTECTION:
THERE ARE 2,173 SF OF STEEP SLOPES ON SITE - ALL ARE CONSTRUCTED (NOT NATURAL) SLOPES

WETLANDS:
THERE ARE NO MAPPED WETLANDS ONSITE.

PROJECT NOTES

BOUNDARY AND TOPOGRAPHIC SURVEY PROVIDED BY CJT, PA DATED AUGUST 19, 2019 AND OCTOBER 22, 2022

SURROUNDING SITE AND PROPERTY INFORMATION PER CHAPEL HILL GIS AND DURHAM CO GIS

TOWN OF CHAPEL HILL NOTES

1. A FIRE FLOW REPORT SHALL BE SUBMITTED TO THE TOWN FOR REVIEW AND APPROVAL PRIOR TO ISSUANCE OF A ZCP.
2. P.E. CERTIFICATION: PRIOR TO THE ISSUANCE OF A CERTIFICATE OF OCCUPANCY FOR ANY PHASE, THE APPLICANT SHALL PROVIDE A CERTIFICATION, SIGNED AND SEALED BY A NORTH CAROLINA-LICENSED PROFESSIONAL ENGINEER, THAT THE STORMWATER MANAGEMENT FACILITY IS CONSTRUCTED IN ACCORDANCE WITH THE APPROVED PLANS AND SPECIFICATIONS.
3. AS-BUILT PLANS: PRIOR TO THE ISSUANCE OF A CERTIFICATE OF OCCUPANCY, THE APPLICANT SHALL PROVIDE CERTIFIED AS-BUILT PLANS FOR BUILDING FOOTPRINTS, PARKING LOTS, STREET IMPROVEMENTS, STORM DRAINAGE SYSTEMS AND STORMWATER MANAGEMENT STRUCTURES, AND ALL OTHER IMPERVIOUS SURFACES, AND A TALLY OF THE CONSTRUCTED IMPERVIOUS AREA. THE AS-BUILT PLANS SHOULD BE IN DXF BINARY FORMAT USING STATE PLANE COORDINATES AND NAVD 88.

LEGEND

Water Valve
Yard Inlet
Curb Inlet/Catch Basin
Mail Box
Traffic Signal Box
Electric Transformer
Electric Junction Box
Gas Meter
Sanitary Sewer Manhole
Storm Sewer Manhole
Telephone Manhole
Electric Manhole
Sign
Telephone Pedestal
Fire Hydrant
Fire Department Connection
Post Indicator Valve
Water Meter
Hot Box

Utility Pole
Guy Wire
Light Pole
Sewer Cleanout
Flared End Section
Gas Valve
Existing Iron Pipe (3/4" unless noted)
1/2" Rebar
1/2" Iron Pipe Set
Existing PK Nail
PK Nail Set
Computed Point
Concrete Monument
Tree Line
Fence
Underground Electric
Underground Telephone
Gas Line
Water Line
Overhead Utilities
Storm Sewer
Sanitary Sewer

PROJECT DATA NORTH SIDE:

TOTAL SURVEYED AREA: 283,779 SF / 6.51 AC

LAND USE:
EXISTING: SINGLE FAMILY RESIDENTIAL
PROPOSED: MULTI-FAMILY RESIDENTIAL
ZONING:
PROPOSED: R-1 REZONED TO R-6-CZD
EXISTING BUILDINGS: 2,727 SF IN FOUR ONE STORY BUILDINGS TO BE REMOVED

PROPOSED BUILDINGS:
MULTI-FAMILY RESIDENTIAL: +/- 40,250 SF FOOTPRINT (+/- 179,000 SF TOTAL)

BUILDING HEIGHT: 32 EFFICIENCIES, 74 1-BEDROOM, 41 2-BEDROOM
4 STORIES OVER LOWER LEVEL PARKING ACCESSED FROM NORTH DRIVEWAY

MAXIMUM BLDG HEIGHT SETBACK: 39'
PROPOSED BLDG HEIGHT SETBACK: 0 (NO BUILDING AT THE SETBACK LINE)

MAXIMUM BLDG HEIGHT CORE: 60'
PROPOSED BLDG HEIGHT CORE: 55.37'

MAX BLDG HEIGHT AT BUILDING FACADE: 48.5' - 60' HT
PROPOSED BLDG HEIGHT AT FACADE: 55.37' (MODIFICATION REQUEST)

PROPOSED USES:
29-35 STUDIO APARTMENTS
68-82 1-BDRM APARTMENTS
29-35 2-BDRM APARTMENTS
134-162 UNITS TOTAL

VEHICULAR PARKING:
REQUIRED:
1.0-1.25 SPACES PER EFFICIENCY = 29-43 SPACES
1.0-1.25 SPACES PER 1-BEDROOM = 68-102 SPACES
1.4-1.75 SPACES PER 2-BEDROOM = 41-61 SPACES
MINIMUM PARKING: 138 SPACES
MAXIMUM PARKING: 206 SPACES

PROPOSED: 198 SPACES ON SITE INCLUDING:
4 SURFACE ADA SPACES
154 SURFACE STANDARD SPACES
2 UNDERGROUND ADA SPACES
38 UNDERGROUND STANDARD SPACES

BICYCLE PARKING:

REQUIRED: 34-40 (1 PER 4 DWELLING UNITS = 148 / 4)
4 SPACES (10%) SHORT TERM
31 SPACES (90%) LONG TERM
PROPOSED: 4 SPACES (2 LOOPS) IN ENTRY PLAZA
36 SPACES IN BUILDING

IMPERVIOUS SURFACE:
EXISTING: 6,578 SF / 0.15 AC (2.3%)
PROPOSED: 127,343 SF / 2.92 AC (45%)

PROJECT DATA SOUTH SIDE:

TOTAL SURVEYED AREA: 426,215 SF / 9.78 AC

LAND USE:
EXISTING: SINGLE FAMILY RESIDENTIAL
PROPOSED: MULTI-FAMILY RESIDENTIAL, SINGLE FAMILY RESIDENTIAL, RETAIL

ZONING:
PROPOSED: R-1 REZONED TO MU-V-CZD

EXISTING BUILDINGS: 12,973 SF IN THIRTEEN ONE STORY BUILDINGS TO BE REMOVED

PROPOSED BUILDINGS:
RESIDENTIAL: 325-390 UNITS
COMMUNITY SPACE: 10,000 SF
OFFICE: 4,000 SF
FLEX COMMERCIAL/RETAIL/REST: 14,000 SF
COMMERCIAL RECREATION: 4,000 SF

BUILDING HEIGHT:
MULTI FAMILY - 7 STORIES (4 RESID OVER 3 PARKING)
MULTI FAMILY - 4 STORIES
TOWNHOMES - 3- AND 4- STORY
SINGLE FAMILY HOMES - 2 STORY

POPE ROAD BUILDING HEIGHT:
MAXIMUM BLDG HEIGHT SETBACK (PROPERTY LINE): 70'
PROPOSED BLDG HEIGHT SETBACK (PROPERTY LINE): 0'

MAXIMUM BLDG HEIGHT CORE: 114'
PROPOSED BLDG HEIGHT CORE: 83'

MAX BLDG HEIGHT AT FACADE: 77' - 85'
PROPOSED BLDG HEIGHT AT FACADE: 37' - 83' (MODIFICATION REQUEST)

PROPOSED USES:
86 - 102 STUDIO UNITS - RENTAL AND CONDO
106 - 147 1-BDRM UNITS - RENTAL AND CONDO
85 - 100 2-BDRM UNITS - RENTAL AND TOWNHOME
42 - 46 3-BDRM UNITS - TOWNHOME AND COTTAGE
320--395 UNITS

VEHICULAR PARKING:
REQUIRED:
1.0-1.25 SPACES PER EFFICIENCY = 86 - 127 SPACES
1.0-1.25 SPACES PER 1-BEDROOM = 106 - 183 SPACES
1.4-1.75 SPACES PER 2-BEDROOM = 119 - 175 SPACES
1.75-2.25 SPACES PER 3-BEDROOM = 74 - 103 SPACES
RETAIL SPACE: 1 SPACE PER 200-300 SF = 60 - 90 SPACES
OFFICE: 1 SPACE PER 250-350 SF = 11 - 16 SPACES
RECREATION: 1 SPACE PER 250-375 SF = 11 - 16 SPACES

MINIMUM PARKING: 467 SPACES
MAXIMUM PARKING: 710 SPACES

PROPOSED: 695 SPACES ON SITE INCLUDING:
UP TO 560 SPACES IN STRUCTURED PARKING
45 SPACES IN TOWNHOME TUCK UNDER PARKING
21 SPACES AT INDIVIDUAL COTTAGES
48 SPACES IN SMALL LOTS ADJACENT TO HOUSING
21 SPACES ON MAIN STREET

BICYCLE PARKING:

REQUIRED: 80 - 99 (1 PER 4 DWELLING UNITS)
8-10 SPACES (10%) SHORT TERM
72 - 89 SPACES (90%) LONG TERM

PROPOSED: BICYCLE PARKING WILL EXCEED REQUIREMENTS - BICYCLE PARKING WILL BE LOCATED NEAR BUILDINGS, NEAR GREEN SPACE, WITHIN STRUCTURED PARKING DECK AND IN INDIVIDUAL HOMES AND TOWNHOMES

IMPERVIOUS SURFACE:
EXISTING: 52,185 SF / 1.20 AC (12.2%)
PROPOSED: 299,170 SF / 6.87 AC (68%)

PRELIMINARY - NOT FOR CONSTRUCTION

NO.	REVISIONS	BY	DATE
1	TOWN COMMENTS	T&H	4/5/23

THOMAS & HUTTON
111 West Main Street
Durham, NC 27701 • 919.682.0368
www.thomasandhutton.com

EB CAPITAL PARTNERS
CHAPEL HILL, NC
CHAPEL HILL CROSSING
SHEET INDEX - GENERAL NOTES

JOB NO:	J- 30792
DATE:	2/10/23
DRAWN:	WLR, AMO, MTC
DESIGNED:	WLR, AMO
REVIEWED:	WLR, AMO
APPROVED:	
SCALE:	

G0.1

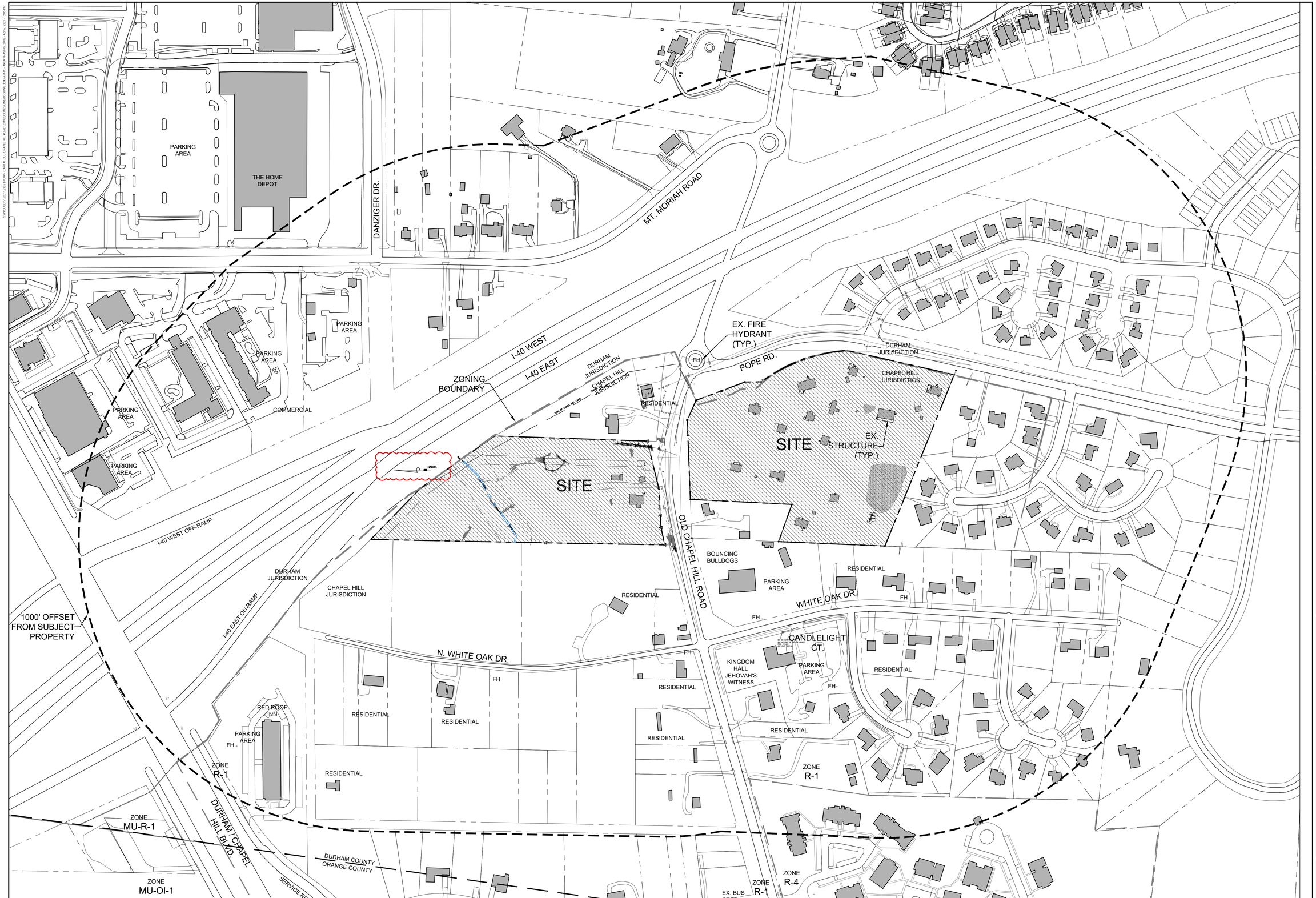

1 C0.1 AREA MAP

SCALE: 1" = 140'

140' 0 140' 280' 420'

Scale 1" = 140'

PRELIMINARY - NOT FOR CONSTRUCTION

NO.	REVISIONS	BY	DATE
1	TOWN COMMENTS	T&H	4/5/23

THOMAS & HUTTON

111 West Main Street
Durham, NC 27701 • 919.682.0368
www.thomasandhutton.com

EB CAPITAL PARTNERS
CHAPEL HILL, NC

CHAPEL HILL CROSSING

AREA MAP

JOB NO:	J- 30792
DATE:	2/10/23
DRAWN:	WLR, AMO, MTC
DESIGNED:	WLR, AMO
REVIEWED:	WLR, AMO
APPROVED:	
SCALE:	1" = 140'

C0.1

PHASES ARE LABELED FOR REFERENCE AND PHASE LABELS ARE NOT INDICATIVE OF SEQUENCE FOR PERMITTING OR CONSTRUCTION. PHASES WILL APPLY FOR AND RECEIVE BUILDING PERMITS AND CERTIFICATES OF OCCUPANCY IN ANY ORDER.

PHASE A: WILL BE PERMITTED SEPARATELY

A SINGLE MULIT-FAMILY BUILDING, WITH UNDER-BUILDING PARKING

136-160 RESIDENTIAL UNITS

PARKING SPACE QUANTITY WILL COMPLY WITH LUMO REGULATIONS

CERTIFICATE OF OCCUPANCY WILL BE DEPENDENT ON :
- THE PROVISION OF AT LEAST 11,150 SF OF RECREATION SPACE BEING PROVIDED ON THE NORTH SIDE OF OLD CHAPEL HILL ROAD
- INSTALLATION OF STORMWATER MITIGATION FACILITY TO TREAT THE ADDITIONAL IMPERVIOUS SURFACE ON THE NORTH SIDE OF OLD CHAPEL HILL ROAD
- WIDENING OF SIDEWALK ON THE FRONTAGE ON THE NORTH SIDE OF OLD CHAPEL HILL ROAD TO A 10' WIDE CONCRETE MULTI-MODAL TRAIL
- INSTALLATION OF SITE LANDSCAPING AS REQUIRED BY APPROVED CONDITIONAL ZONING FOR THE PARCELS ON THE NORTH SIDE OF OLD CHAPEL HILL ROAD
- INSTALLATION OF PAVED DRIVEWAY TO SATISFY NC FIRE CODE REQUIREMENTS

PHASE B: EACH STRUCTURE WILL BE PERMITTED SEPARATELY

SINGLE FAMILY HOMES AND TOWNHOME CLUSTERS

20-30 RESIDENTIAL UNITS

PARKING SPACE QUANTITY WILL COMPLY WITH LUMO REGULATIONS

BUILDING PERMITS AND CERTIFICATES OF OCCUPANCY WILL BE ISSUED FOR EACH STRUCTURE INDEPENDENT OF OTHERS IN THE PHASE

ISSUANCE OF FIRST CERTIFICATE OF OCCUPANCY IS DEPENDENT ON :
- THE INSTALLATION OF A STORM MITIGATION FACILITY SIZED TO TREAT ALL NEW PROPOSED IMPERVIOUS IN THIS PHASE.
- INSTALLATION OF LANDSCAPE BUFFER ALONG THE WEST PROPERTY LINE ADJACENT TO THIS PHASE
- INSTALLATION OF PAVED DRIVEWAY ACCESS TO SATISFY NC FIRE CODE REQUIREMENTS

PHASE C: EACH STRUCTURE WILL BE PERMITTED SEPARATELY

SINGLE FAMILY HOMES AND TOWNHOME CLUSTERS

20-30 RESIDENTIAL UNITS

PARKING SPACE QUANTITY WILL COMPLY WITH LUMO REGULATIONS

BUILDING PERMITS AND CERTIFICATES OF OCCUPANCY WILL BE ISSUED FOR EACH STRUCTURE INDEPENDENT OF OTHERS IN THE PHASE

ISSUANCE OF FIRST CERTIFICATE OF OCCUPANCY IS DEPENDENT ON :
- THE INSTALLATION OF A STORM MITIGATION FACILITY SIZED TO TREAT ALL NEW PROPOSED IMPERVIOUS IN THIS PHASE.
- INSTALLATION OF LANDSCAPE BUFFER ALONG THE ADJACENT POPE ROAD FRONTAGE AND ALONG THE SOUTH PROPERTY LINE ADJACENT TO THIS PHASE
- INSTALLATION OF PAVED DRIVEWAY ACCESS TO SATISFY NC FIRE CODE REQUIREMENTS

PHASE D: SINGLE MULTI-FAMILY AND MIXED USE BUILDING WITH SINGLE PERMITS

30-40 RESIDENTIAL UNITS, 8,000-10,000 SF NON-RESIDENTIAL SPACE

ISSUANCE OF THE CERTIFICATE OF OCCUPANCY IS DEPENDENT ON:
- THE INSTALLATION OF A STORM MITIGATION FACILITY SIZED TO TREAT ALL NEW PROPOSED IMPERVIOUS IN THIS PHASE
- INSTALLATION OF PAVED DRIVEWAY ACCESS TO SATISFY NC FIRE CODE REQUIREMENTS
- SUFFICIENT PARKING ON SITE TO MEET LUMO MINIMUM REQUIREMENTS

PHASE E: SINGLE MULTI-FAMILY AND MIXED USE BUILDING

215-270 RESIDENTIAL UNITS, 7,000-12,000 SF NON-RESIDENTIAL SPACE

THE ENTIRE PARKING DECK WILL BE COMPLETED IN THIS PHASE REGARDLESS OF AMOUNT OF PARKING REQUIRED ON THE WHOLE SITE AS OF THE REQUEST FOR CERTIFICATE OF OCCUPANCY. THE PARKING DECK NEEDS TO BE BUILT IN ONE PHASE BUT PROVIDES PARKING FOR MULTIPLE BUILDINGS WITHIN THE PROJECT.

ISSUANCE OF THE CERTIFICATE OF OCCUPANCY IS DEPENDENT ON:
- THE INSTALLATION OF A STORM MITIGATION FACILITY SIZED TO TREAT ALL NEW PROPOSED IMPERVIOUS IN THIS PHASE
- INSTALLATION OF LANDSCAPE BUFFER ALONG THE POPE ROAD AND OLD CHAPEL HILL ROAD FRONTAGES ADJACENT TO THIS PHASE
- INSTALLATION OF PAVED DRIVEWAY ACCESS TO SATISFY NC FIRE CODE REQUIREMENTS

PHASE F: EACH STRUCTURE WILL BE PERMITTED SEPARATELY

TOWNHOME CLUSTERS

9-13 RESIDENTIAL UNITS

PARKING SPACE QUANTITY WILL COMPLY WITH LUMO REGULATIONS

BUILDING PERMITS AND CERTIFICATES OF OCCUPANCY WILL BE ISSUED FOR EACH BUILDING INDEPENDENT OF OTHERS IN THE PHASE

ISSUANCE OF FIRST CERTIFICATE OF OCCUPANCY IS DEPENDENT ON :
- THE INSTALLATION OF A STORM MITIGATION FACILITY SIZED TO TREAT ALL NEW PROPOSED IMPERVIOUS IN THIS PHASE.
- INSTALLATION OF LANDSCAPE BUFFER ALONG THE OLD CHAPEL HILL ROAD FRONTAGE ADJACENT TO THIS PHASE
- INSTALLATION OF PAVED DRIVEWAY ACCESS TO SATISFY NC FIRE CODE REQUIREMENTS

TRIGGERS FOR COMMUNITY FACILITIES:

PRIOR TO CERTIFICATE OF OCCUPANCY FOR MULTI-FAMILY BUILDING NORTH SIDE OLD CHAPEL HILL ROAD:
- ALL RECREATION FACILITIES LOCATED ON THAT PARCEL AS INDICATED IN THE APPROVED CONDITIONAL ZONING

PRIOR TO FIRST CERTIFICATE OF OCCUPANCY ON SOUTH SIDE:
- APPROPRIATE MAIL KIOSK OR MAIL DELIVERY OPTION
- 1 DUMPSTER FACILITY OR ACCOMMODATION FOR ROLL-OUT CART PICKUP

PRIOR TO APPLICATION FOR CERTIFICATE OF OCCUPANCY FOR 50th UNIT ON SOUTH SIDE (APPROX 15% OF TOTAL UNITS)
- INSTALLATION OF PLAYGROUND EQUIPMENT
- INSTALLATION OF COMMUNITY GAZEBO

PRIOR TO APPLICATION FOR CERTIFICATE OF OCCUPANCY FOR 100TH UNIT ON SOUTH SIDE (APPROXIMATELY 30% OF TOTAL UNITS)
- CONSTRUCTION OF ONE THIRD OF THE REQUIRED BIKE STORAGE FACILITIES
- COMPLETION OF AT LEAST 5,000 SF OF RECREATION SPACE

PRIOR TO APPLICATION FOR CERTIFICATE OF OCCUPANCY FOR FOR 200th UNIT ON SOUTH SIDE (APPROXIMATELY HALF OF TOTAL UNITS)
- COMPLETION OF HALF THE COMMUNITY GREENSPACE

2 C0.2 PHASING DETAIL

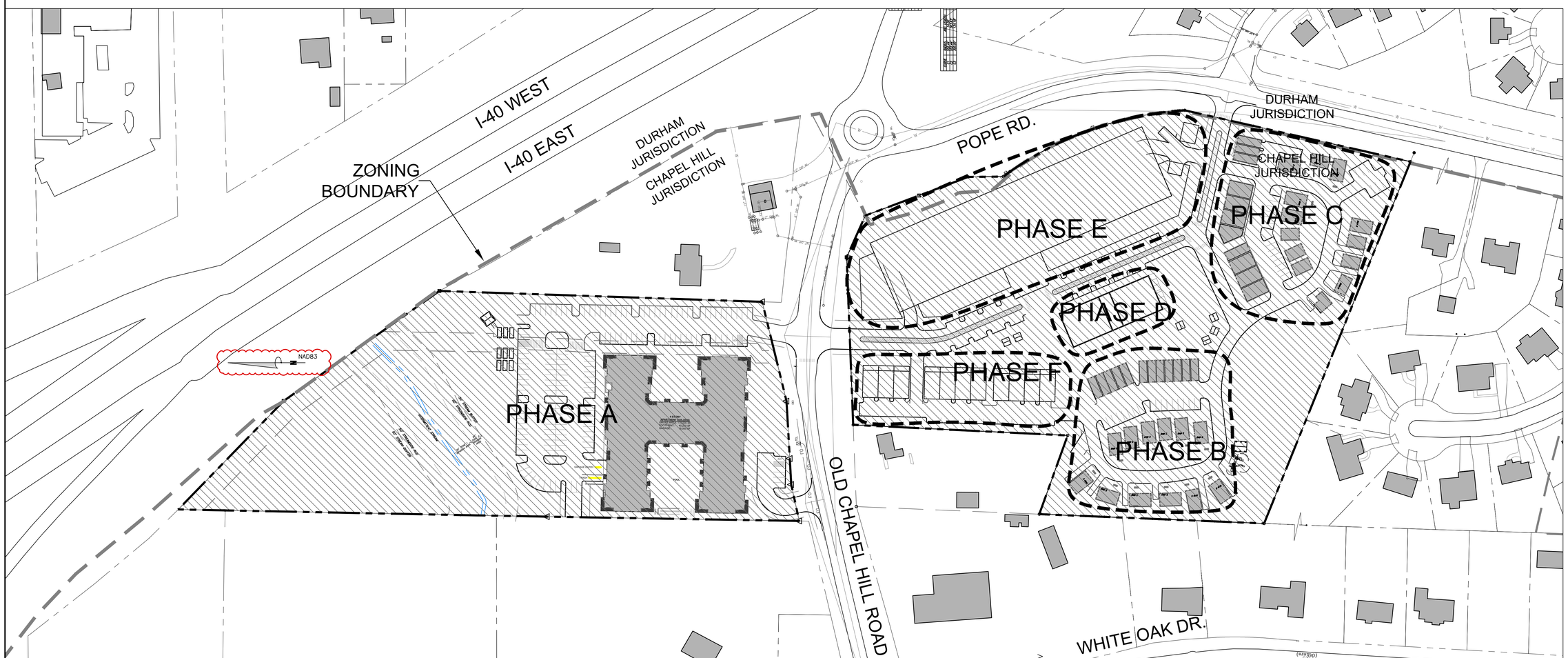

1 C0.2 PHASING PLAN
SCALE: 1" = 80'

PRELIMINARY - NOT FOR CONSTRUCTION

NO.	REVISIONS	BY	DATE
1	TOWN COMMENTS	T&H	4/5/23

THOMAS & HUTTON
111 West Main Street
Durham, NC 27701 • 919.682.0368
www.thomasandhutton.com

EB CAPITAL PARTNERS
CHAPEL HILL, NC
CHAPEL HILL CROSSING
PHASING PLAN

JOB NO:	J- 30792
DATE:	2/10/23
DRAWN:	WLR, AMO, MTC
DESIGNED:	WLR, AMO
REVIEWED:	WLR, AMO
APPROVED:	
SCALE:	1" = 80'

C0.2

1. ENSURE ALL EROSION CONTROL MEASURES ARE IN PLACE AND IN WORKING ORDER PRIOR TO THE START OF ANY DEMOLITION AND CONSTRUCTION.

2. SEE SITE PLAN SHEET C-2.0 FOR LAYOUT DIMENSIONS OF EXTENT OF DEMOLISHED AREAS. PAVED AREAS NOT INDICATED TO BE DEMOLISHED, ARE TO REMAIN. ALL CONCRETE SAW CUTS ARE TO BE CLEAN, STRAIGHT AND NEAT.

3. UTILITIES: SEE UTILITY PLAN C-5.0. CONTRACTOR TO COORDINATE WITH UTILITY COMPANIES FOR LOCATION, REMOVAL AND RELOCATION OF ANY UTILITIES. CONTRACTOR RESPONSIBLE FOR DETERMINING EXTENT AND LOCATION OF UTILITIES. THIS MAY INCLUDE CONTACTING "NO-CUTS" TO HELP LOCATE SOME UTILITIES.

4. CONTRACTOR TO ADJUST ALL MANHOLES, VALVES, JUNCTION BOXES, CATCH BASINS, CLEAN-OUTS, ETC., AS NECESSARY TO ACCOMMODATE NEW LAYOUT AND GRADES.

5. CONTRACTOR RESPONSIBLE FOR OBTAINING ANY PERMITS FOR WORK IN THE NCDOT AND TOWN OF CHAPEL HILL RIGHTS OF WAY. ANY DAMAGED INFRASTRUCTURE IN THE RIGHT OF WAY CAUSED BY CONSTRUCTION ACTIVITIES MUST BE REPAIRED TO TOWN OF CHAPEL HILL OR NCDOT STANDARDS. THIS INCLUDES, BUT IS NOT LIMITED TO UTILITIES, SIDEWALKS, CURB AND GUTTER, ASPHALT.

6. CONTRACTOR RESPONSIBLE FOR REMOVING EVERYTHING WITHIN THE CLEARING LIMITS AND OFF-SITE WORK ZONE INCLUDING TREES, STUMPS, TRASH, FENCING, OR BUILDING MATERIALS.

7. CONTRACTOR TO USE CAUTION WORKING AROUND AND NEAR EXISTING STORM, WATER AND SEWER. CONTRACTOR RESPONSIBLE FOR DAMAGE TO EXISTING UTILITIES.

8. ABANDONMENT OF WATER SERVICES SHALL INCLUDE EXCAVATING DOWN TO CORPORATION, TURNING IT OFF AND CUTTING SERVICE LINE FREE FROM CORPORATION. THE METER, IF PRESENT, SHALL BE RETURNED TO OWASA.

9. ABANDONMENT OF SANITARY SEWER SERVICE LINES SHALL CONSIST OF PLUGGING THE LATERAL AT THE RIGHT-OF-WAY LINE.

10. ALL PAVEMENT PATCHING SHALL BE PERFORMED PER NCDOT SPECIFICATIONS AND STANDARDS.

11. A DECONSTRUCTION ASSESSMENT MUST BE CONDUCTED BY OCSW STAFF PRIOR TO THE APPROVAL OF THE DEMOLITION PERMIT FOR THE EXISTING STRUCTURES. CONTACT OCSW ENFORCEMENT STAFF AT 919-968-2788 TO REQUEST THE ASSESSMENT. BUILDINGS TO BE DEMOLISHED MUST BE INSPECTED BY A NC ACCREDITED ASBESTOS PROFESSIONAL. SUBMIT REPORT WITH DEMOLITION PERMIT APPLICATION.

12. A SEPARATE DEMOLITION PERMIT IS REQUIRED FOR EACH BUILDING.

13. PRIOR TO ANY DEMOLITION OR CONSTRUCTION ACTIVITY ON THE SITE THE APPLICANT WILL HOLD A PRE-DEMOLITION/PRE-CONSTRUCTION CONFERENCE WITH THE COUNTY'S SOLID WASTE STAFF. THIS MAY BE THE SAME MEETING HELD WITH OTHER DEVELOPMENT OFFICIALS.

14. THE PRESENCE OF ANY ASBESTOS CONTAINING MATERIAL ('ACM') OR OTHER HAZARDOUS MATERIALS IN CONSTRUCTION AND DEMOLITION WASTE SHALL BE HANDLED IN ACCORDANCE WITH ANY AND ALL LOCAL, STATE, AND FEDERAL REGULATIONS AND GUIDELINES.

15. ANY INVASIVE, EXOTIC PLANT MATERIAL WILL BE REMOVED. A SURVEY OF EXISTING THE LANDSCAPE BUFFERS TO REMAIN WILL BE CONDUCTED FOLLOWING INITIAL CLEARING, AND ANY INVASIVE OR EXOTIC SPECIES FOUND WILL BE REMOVED.

18. ASBESTOS ABATEMENT REPORT REQUIRED BEFORE DEMOLITION PERMIT MAY BE ISSUED.

19. A PERMIT FROM THE CHAPEL HILL FIRE MARSHAL'S OFFICE IS REQUIRED TO REMOVE ANY FLAMMABLE / COMBUSTIBLE LIQUIDS FROM UNDERGROUND OR ABOVE-GROUND TANKS OTHER THAN BY THE ON-SITE PUMPS. 2018 NC FIRE CODE SECTION 105.6.17 #5.

20. A PERMIT FROM THE CHAPEL HILL FIRE MARSHAL'S OFFICE IS REQUIRED TO REMOVE ANY UNDERGROUND OR ABOVE-GROUND TANKS THAT CONTAINED FLAMMABLE / COMBUSTIBLE LIQUIDS. 2018 NC FIRE CODE SECTION 105.6.17 #7.

21. TREE PROTECTION SEMINAR TO BE COMPLETED BY CONTRACTOR PRIOR TO TREE PROTECTION FENCE INSTALLATION. PLEASE CALL ADAM NICHOLSON AT 919-969-5006

2 / C-1.0 DEMOLITION NOTES

LEGEND

Water Valve		Utility Pole	
Yard Inlet		Guy Wire	
Curb Inlet/Catch Basin		Light Pole	LP
Mail Box		Sewer Cleanout	CO
Traffic Signal Box	TSB	Flared End Section	
Electric Transformer	T	Gas Valve	GV
Electric Junction Box	E	Existing Iron Pipe (3/4" unless noted)	
Gas Meter	G	1/2" Rebar	
Sanitary Sewer Manhole	S	1/2" Iron Pipe Set	IPS
Storm Sewer Manhole	S	Existing PK Nail	PK
Telephone Manhole	T	PK Nail Set	PKS
Electric Manhole	E	Computed Point	
Sign		Concrete Monument	
Telephone Pedestal	TEL	Tree Line	
Fire Hydrant		Fence	x x
Fire Department Connection	FDC	Underground Electric	UE UE
Post Indicator Valve		Underground Telephone	UT UT
Water Meter		Gas Line	GAS
Hot Box		Water Line	W W
		Overhead Utilities	OU OU
		Storm Sewer	S S
		Sanitary Sewer	SS SS

KEY

- SLOPES 10% - 15%
- SLOPES 15% - 25%
- SLOPES > 25%
- EXISTING RARE OR SPECIMEN TREE WITH CRITICAL ROOT SAVE AREA

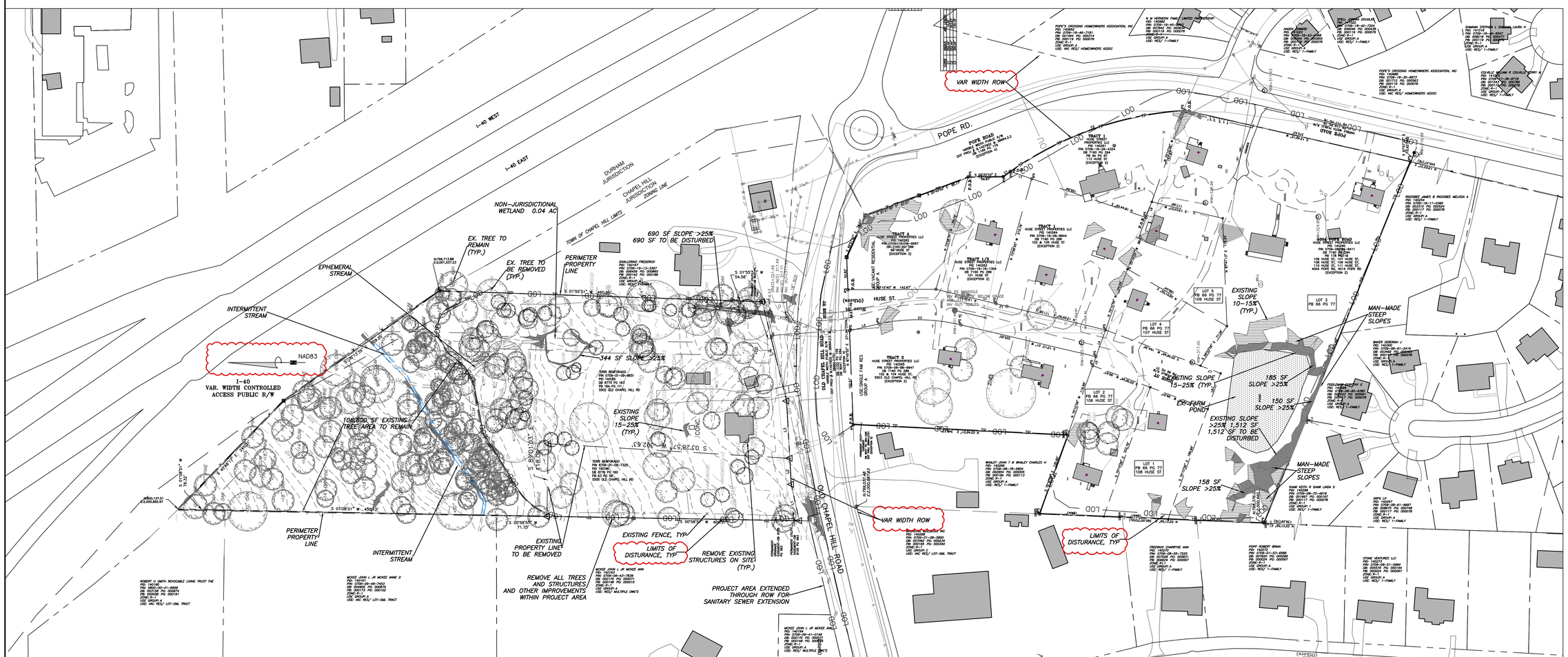

1 / D-1.1 EXISTING CONDITIONS AND DEMOLITION

SCALE: 1" = 80'

80' 0 80' 160' 240'

Scale 1" = 80'

PRELIMINARY NOT FOR CONSTRUCTION

4/5/23

NO.	REVISIONS	BY	DATE
1	TOWN COMMENTS	T&H	4/5/23

THOMAS & HUTTON
111 West Main Street
Durham, NC 27701 • 919.682.0368
www.thomasandhutton.com

EB CAPITAL PARTNERS
CHAPEL HILL, NC
CHAPEL HILL CROSSING
EXISTING CONDITIONS AND DEMOLITION

JOB NO:	J- 30792
DATE:	2/10/23
DRAWN:	WLR, AMO, MTC
DESIGNED:	WLR, AMO
REVIEWED:	WLR, AMO
APPROVED:	
SCALE:	1" = 80'

D1.1

1. ALL ANGLES ARE 90 DEGREES UNLESS OTHERWISE NOTED.
2. DIMENSIONS TO BUILDING WALL ARE TO FACE OF WALL AT FINISH GRADE. DIMENSIONS TO CURB ARE TO FACE OF CURB.
3. LAY OUT IMPROVEMENTS FOR THE CIVIL ENGINEER'S OR LANDSCAPE ARCHITECT'S REVIEW PRIOR TO BEGINNING CONSTRUCTION.
4. REFERENCE ARCHITECTURAL DRAWINGS FOR BUILDING LAYOUT INFORMATION.
5. ADA PARKING SPACES SHALL BE SIGNED WITH TYPE R7-8 OR R7-8A RESERVED PARKING SIGN AND R7-8D MAXIMUM FINE SIGN PER GS 20-37.6 OF THE NORTH CAROLINA HANDICAP CODE. ADA RAMPS SHALL HAVE RAMP SURFACES COVERED WITH DETECTABLE WARNING PATTERN PER ADA STANDARDS.
6. REFERENCE EXISTING CONDITION SHEET C-1.0 FOR EXTENT OF DEMOLITION AND REMOVAL OF CURB AND GUTTER, DRIVEWAYS, PAVEMENT, BOLLARDS, WALKWAYS, UTILITIES, AND VEGETATION.
7. PRIOR TO ANY DEMOLITION OR CONSTRUCTION ACTIVITY ON THE SITE THE APPLICANT WILL HOLD A PRE-DEMOLITION/PRE-CONSTRUCTION CONFERENCE WITH THE COUNTY'S SOLID WASTE STAFF. THIS MAY BE THE SAME MEETING HELD WITH OTHER DEVELOPMENT OFFICIALS.
8. THE PRESENCE OF ANY ASBESTOS CONTAINING MATERIAL ('ACM') OR OTHER HAZARDOUS MATERIALS IN CONSTRUCTION AND DEMOLITION WASTE SHALL BE HANDLED IN ACCORDANCE WITH ANY AND ALL LOCAL, STATE, AND FEDERAL REGULATIONS AND GUIDELINES.
9. KEY BOXES FOR FIRST RESPONDERS WILL BE REQUIRED NEAR THE FRONT DOOR AND SPRINKLER RISER ROOM AREAS. 2012 NC FIRE CODE, SECTION 506.
10. MECHANICAL EQUIPMENT MUST BE PLACED AT OR ABOVE BASE FLOOD ELEVATION + 2 FEET.
14. PRIOR TO PERFORMING WORK IN THE NCDOT R/W, THE APPLICANT WILL NEED TO OBTAIN THE FOLLOWING:
(1) APPROVED NCDOT DRIVEWAY PERMITS FOR PROPOSED ACCESSES TO NC 1838.
(2) APPROVED NCDOT THREE-PARTY ENCROACHMENT AGREEMENT WITH TOCH FOR PROPOSED / STIPULATED SIDEWALK AND APPURTENANCES.
(3) APPROVED NCDOT THREE-PARTY ENCROACHMENT AGREEMENT WITH OWASA FOR PROPOSED WATER AND SEWER CONNECTIONS.
15. PRIOR TO ISSUANCE OF THE DRIVEWAY PERMITS AND ENCROACHMENT AGREEMENTS, THE APPLICANT WILL NEED TO PROVIDE COMPLETE AND DETAILED DESIGN PLANS PER NCDOT, TOCH, AND OWASA REQUIREMENTS FOR REVIEW AND APPROVAL.

2 / C1.1 SITE LAYOUT NOTES

ADA route notes apply to all sheets

FOR ALL SIDEWALKS THE FOLLOWING APPLIES:

1. SIDEWALK SLOPES TO BE A MAXIMUM 4.8%.
2. SIDEWALK CROSS SLOPES TO BE A MAXIMUM 1.8%.
3. MINIMUM 1' SHOULDER AT MAXIMUM 2% SLOPE ADJACENT TO ADA PAVED ROUTES UNLESS A HANDRAIL IS CALLED OUT.
4. ADA PARKING TO BE A MAXIMUM 1.8% SLOPE IN ANY DIRECTION FOR ENTIRE AREA – PARKING SPACES AND AISLES.
5. ALL DOORS EXITING THE BUILDING REQUIRE AN ADA ACCESSIBLE COMPLIANT ROUTE TO A PUBLIC WAY.
6. PARKING – NUMBER OF SPACES TO COMPLY WITH NCBC 2012 SECTION 1106.1, 1 PER 6 COMPLIANT SPACES OR PORTION THEREOF MUST BE VAN ACCESSIBLE, NO SLOPE TO EXCEED 2% IN ANY DIRECTION. SIGNAGE PER NC REQUIREMENTS, MUT-CD AND ICC A 117.1.
7. CURB CUTS AND ACCESSIBLE ROUTES PER ICC A117.1 2009 ED. CROSS SLOPE LIMITED TO 2%, CALL FOR INSPECTION BEFORE PLACEMENT OF CONCRETE.
8. SLOPE GREATER THAN 5% REQUIRES CONSTRUCTION AS A RAMP.

3 / C1.1 ADA NOTES

Water Valve
Yard Inlet
Curb Inlet/Catch Basin
Mail Box
Traffic Signal Box
Electric Transformer
Electric Junction Box
Gas Meter
Sanitary Sewer Manhole
Storm Sewer Manhole
Telephone Manhole
Electric Manhole
Sign
Telephone Pedestal
Fire Hydrant
Fire Department Connection
Post Indicator Valve
Water Meter
Hot Box

Utility Pole
Guy Wire
Light Pole
Sewer Cleanout
Flared End Section
Gas Valve
Existing Iron Pipe (3/4" unless noted)
1/2" Rebar
1/2" Iron Pipe Set
Existing PK Nail
PK Nail Set
Computed Point
Concrete Monument
Tree Line
Fence
Underground Electric
Underground Telephone
Gas Line
Water Line
Overhead Utilities
Storm Sewer
Sanitary Sewer

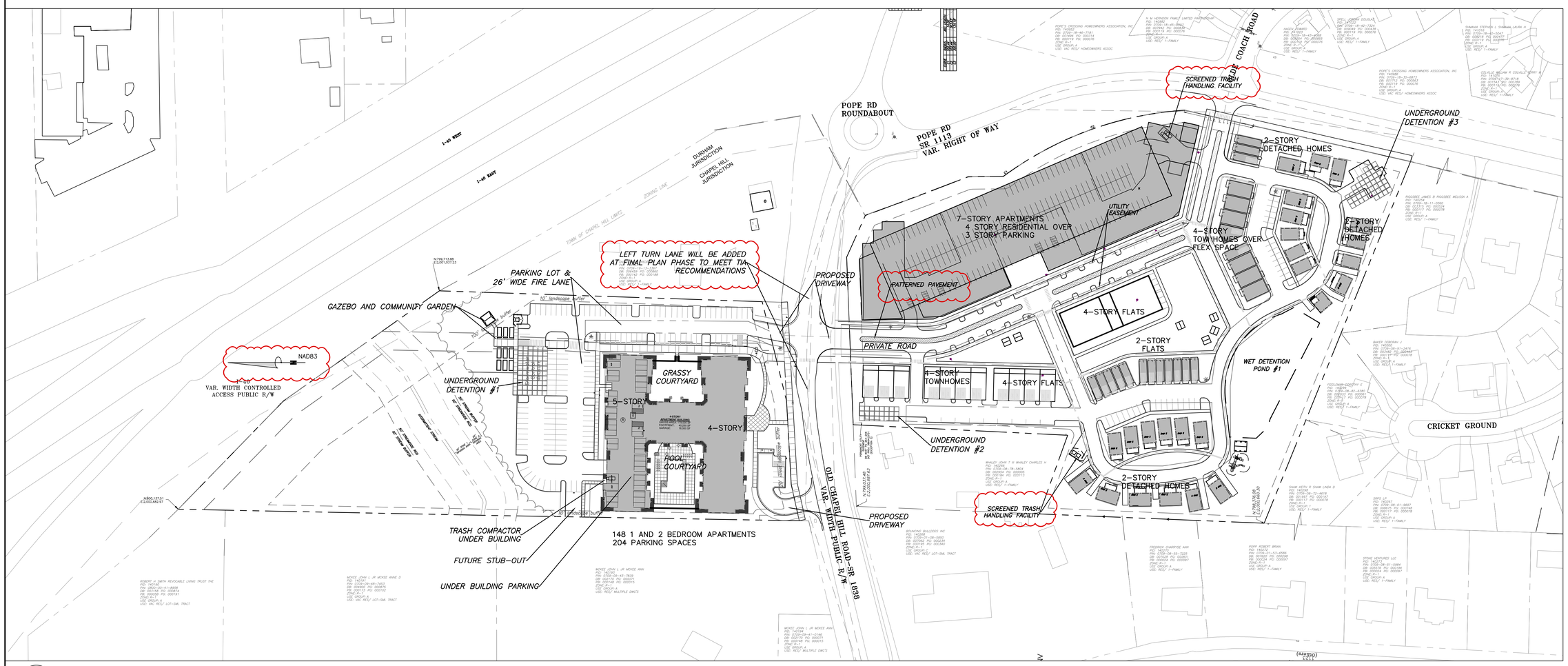

1 / C1.1 SITE PLAN - OVERALL

SCALE: 1"=40'

PRELIMINARY - NOT FOR CONSTRUCTION

NO.	TOWN COMMENTS	BY	DATE
1		T&H	4/5/23

REVISIONS

THOMAS & HUTTON
111 West Main Street
Durham, NC 27701 • 919.682.0368
www.thomasandhutton.com

EB CAPITAL PARTNERS
CHAPEL HILL, NC

CHAPEL HILL CROSSING

SITE PLAN - OVERALL

JOB NO:	J- 30792
DATE:	2/10/23
DRAWN:	WLR, AMO, MTC
DESIGNED:	WLR, AMO
REVIEWED:	WLR, AMO
APPROVED:	
SCALE:	1"=40'

C1.1

GROSS SITE AREA NORTH: 312,157 SF
GROSS SITE AREA SOUTH: 468,837 SF
TOTAL GROSS SITE AREA: 780,994 SF

MULTIFAMILY RESIDENTIAL RECREATION RATIO = .050
TOTAL REQUIRED RECREATION SPACE = 39,050 SF

ACTIVE RECREATION SPACE PROVIDED:

POOL AREA NORTH	6,000 SF
COMMUNITY GARDEN	2,900 SF
FITNESS CENTER NORTH	2,200 SF
POOL TERRACE SOUTH	6,000 SF
FITNESS CENTER SOUTH	3,750 SF
PLAYGROUND/SHELTER	1,750 SF
OUTDOOR REC TERRACE N	4,000 SF
OUTDOOR REC TERRACE S	4,500 SF
PAVED WALKING CIRCUIT	8,200 SF
TOTAL:	39,300 SF

NORTH SIDE CALCULATION:
GROSS SITE AREA NORTH: 312,157 SF

MULTIFAMILY RESIDENTIAL RECREATION RATIO = .050
TOTAL REQUIRED RECREATION SPACE = 15,608 SF

ACTIVE RECREATION SPACE PROVIDED:

POOL AREA NORTH	5,800 SF
COMMUNITY GARDEN	3,000 SF
GREENWAY TRAIL	4,750 SF
FITNESS CENTER NORTH	2,200 SF
TOTAL NORTH SIDE:	15,750 SF

SOUTH SIDE CALCULATION
GROSS SITE AREA SOUTH: 468,837 SF

MULTIFAMILY RESIDENTIAL RECREATION RATIO = .050
TOTAL REQUIRED RECREATION SPACE = 23,442 SF

ACTIVE RECREATION SPACE PROVIDED:

POOL TERRACE SOUTH	4,000 SF
FITNESS CENTER SOUTH	3,750 SF
PLAYGROUND/SHELTER	1,750 SF
OUTDOOR REC TERRACE N	3,500 SF
OUTDOOR REC TERRACE S	3,500 SF
PAVED WALKING CIRCUIT	8,000 SF
TOTAL SOUTH SIDE:	24,500 SF

Water Valve
Yard Inlet
Curb Inlet/Catch Basin
Mail Box
Traffic Signal Box
Electric Transformer
Electric Junction Box
Gas Meter
Sanitary Sewer Manhole
Storm Sewer Manhole
Telephone Manhole
Electric Manhole
Sign
Telephone Pedestal
Fire Hydrant
Fire Department Connection
Post Indicator Valve
Water Meter
Hot Box

Utility Pole
Guy Wire
Light Pole
Sewer Cleanout
Flared End Section
Gas Valve
Existing Iron Pipe (3/4" unless noted)
1/2" Rebar
1/2" Iron Pipe Set
Existing PK Nail
PK Nail Set
Computed Point
Concrete Monument
Tree Line
Fence
Underground Electric
Underground Telephone
Gas Line
Water Line
Overhead Utilities
Storm Sewer
Sanitary Sewer

2 / C1.2 RECREATION SPACE CALCULATIONS

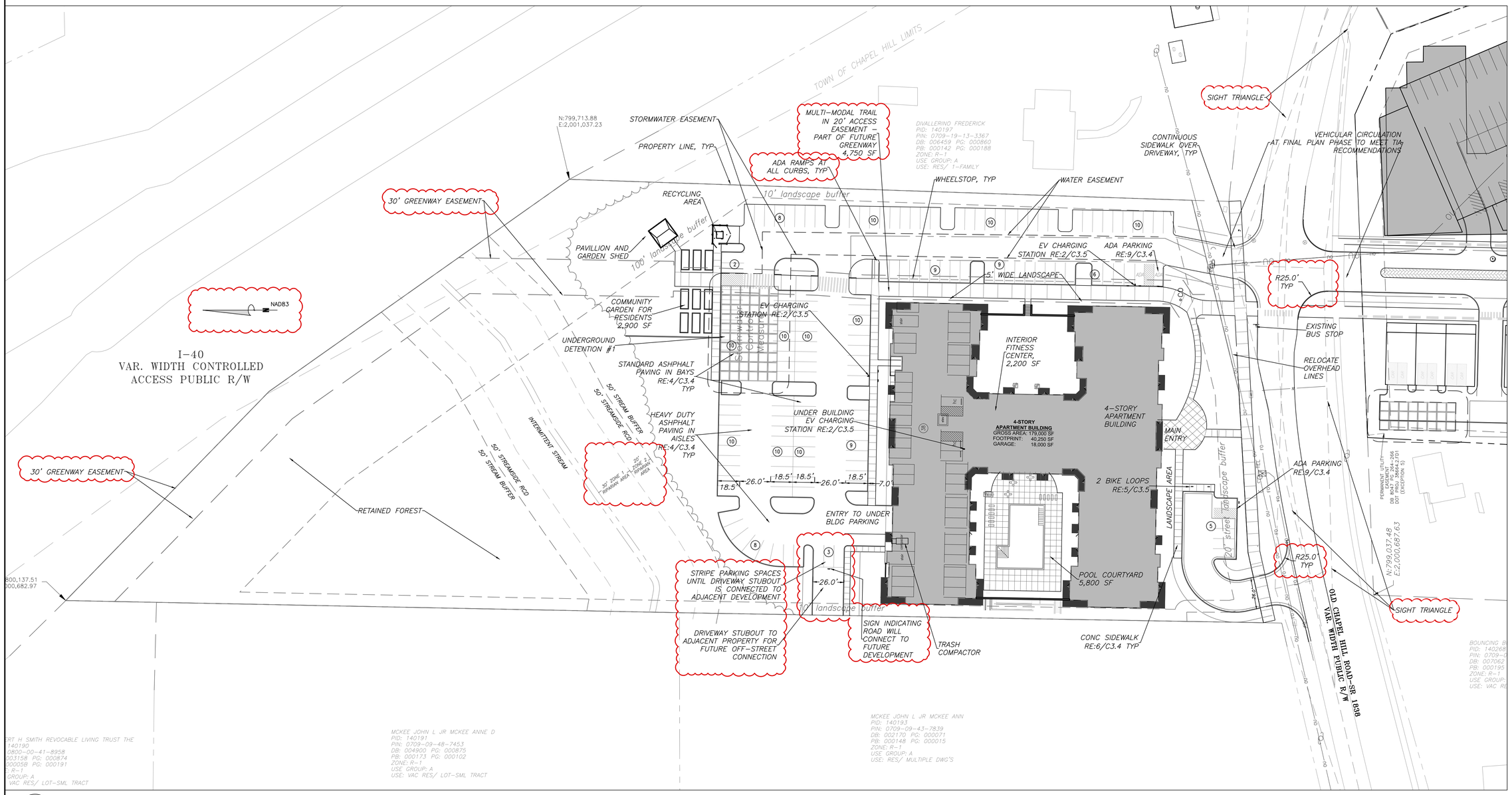

1 / C1.2 SITE PLAN - NORTH

SCALE: 1" = 40'

40' 0 40' 80' 120'
Scale 1" = 40'

PRELIMINARY - NOT FOR CONSTRUCTION

NO.	REVISIONS	BY	DATE
1	TOWN COMMENTS	T&H	4/5/23

THOMAS & HUTTON
111 West Main Street
Durham, NC 27701 • 919.682.0368
www.thomasandhutton.com

EB CAPITAL PARTNERS
CHAPEL HILL, NC

CHAPEL HILL CROSSING

SITE PLAN - NORTH

JOB NO:	J- 30792
DATE:	2/10/23
DRAWN:	WLR, AMO, MTC
DESIGNED:	WLR, AMO
REVIEWED:	WLR, AMO
APPROVED:	
SCALE:	1" = 40'

C1.2

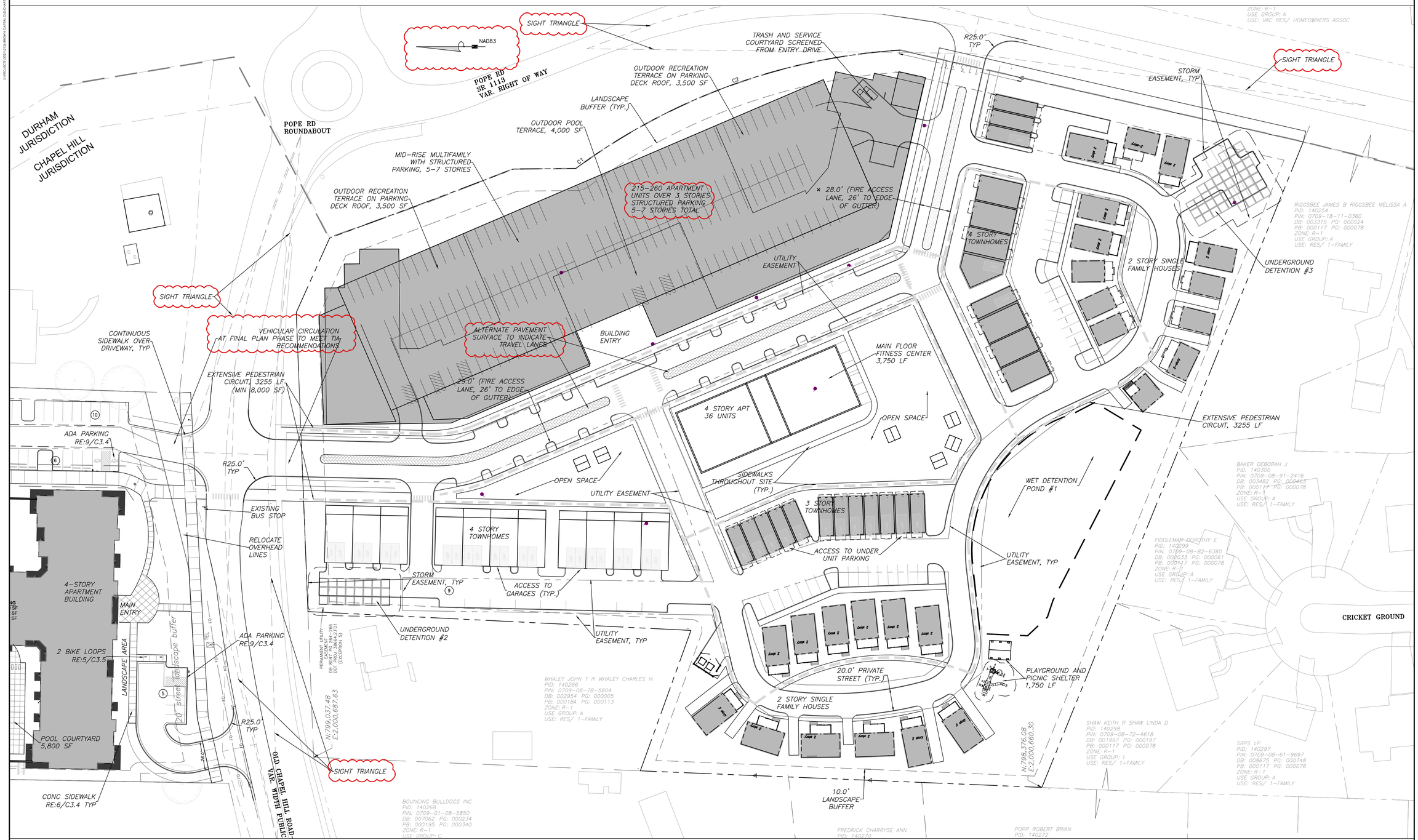

1 C1.3 SITE PLAN - SOUTH

SCALE: 1" = 40'

PRELIMINARY - NOT FOR CONSTRUCTION

NO.	REVISIONS	BY	DATE
1	TOWN COMMENTS	T&H	4/5/23

THOMAS & HUTTON
111 West Main Street
Durham, NC 27701 • 919.682.0368
www.thomasandhutton.com

EB CAPITAL PARTNERS
CHAPEL HILL, NC

CHAPEL HILL CROSSING

SITE PLAN - SOUTH

JOB NO:	J- 30792
DATE:	2/10/23
DRAWN:	WLR, AMO, MTC
DESIGNED:	WLR, AMO
REVIEWED:	WLR, AMO
APPROVED:	
SCALE:	1" = 40'

C1.3

1. CONTRACTOR SHALL NOTIFY "NORTH CAROLINA ONE CALL" (1-800-632-4949) AT LEAST 48 HOURS PRIOR TO BEGINNING CONSTRUCTION OR EXCAVATION TO HAVE EXISTING UTILITIES LOCATED. CONTRACTOR TO CONTACT ANY LOCAL UTILITIIES THAT PROVIDE THEIR OWN LOCATOR SERVICE INDEPENDENT OF "NORTH CAROLINA ONE CALL".
2. ALL WATER AND SEWER MAINS WITHIN PUBLIC EASEMENTS AND RIGHT-OF-WAYS TO BE OWNED, OPERATED AND MAINTAINED BY OWASA.
3. ALL CONSTRUCTION SHALL BE IN ACCORDANCE WITH THE TOWN OF CHAPEL HILL AND OWASA STANDARDS AND SPECIFICATIONS.
4. ALL EXISTING UNDERGROUND UTILITIES ARE APPROXIMATELY LOCATED. ACTUAL LOCATION AND DEPTH SHALL BE CONFIRMED IN THE FIELD PRIOR TO CONSTRUCTION.
5. BEFORE STARTING ANY CONSTRUCTION OF IMPROVEMENTS WITHIN ANY TOWN OR N.C.D.O.T. STREET OR HIGHWAY RIGHT-OF-WAY THE FOLLOWING PROCEDURES SHOULD BE UNDERTAKEN; TOWN RIGHT-OF-WAY: CONTACT LOCAL AUTHORITIES' TRAFFIC ENGINEERING DEPT. FOR INFORMATION ON DETOURS, OPEN CUTTING OF STREETS OR FOR ANY CONSTRUCTION WITHIN RIGHT-OF-WAY. N.C.D.O.T. RIGHT-OF-WAY: CONTACT PROJECT ENGINEERS AND OBTAIN ALL PERMITS AND ENCROACHMENTS (KEEP COPIES ON CONSTRUCTION SITE, ALSO CONTACT N.C.D.O.T. DISTRICT OFFICE 24 HOURS IN ADVANCE BEFORE PLACING CURB AND GUTTER).
6. ALL DIMENSIONS AND GRADES SHOWN ON THE PLANS SHALL BE FIELD VERIFIED BY THE CONTRACTOR PRIOR TO CONSTRUCTION. CONTRACTOR SHALL NOTIFY THE OWNER IF ANY DISCREPANCIES EXIST. PRIOR TO PROCEEDING WITH CONSTRUCTION FOR NECESSARY PLAN OR GRADING CHANGES. NO EXTRA COMPENSATION SHALL BE PAID TO THE CONTRACTOR FOR ANY WORK DONE DUE TO DIMENSIONS OR GRADES SHOWN INCORRECTLY ON THESE PLANS IF SUCH NOTIFICATION HAS NOT BEEN GIVEN.
7. POWER, TELEPHONE, AND GAS SERVICES TO BUILDINGS SHALL BE UNDERGROUND. ACCESS AND SERVICE ROUTES TO BE COORDINATED WITH THE PUBLIC UTILITIES, CONTRACTOR AND THE OWNER.
8. RESURFACING OF STREET DUE TO UTILITY CUTS SHALL BE REQUIRED AT THE DIRECTION OF ENGINEERING. (MINIMUM 50' TO EITHER SIDE OF UTILITY CUTS).
9. PROVIDE 10-FT OF HORIZONTAL SEPARATION BETWEEN PROPOSED NEW WATER AND SEWER MAINS
10. WELL AND SEPTIC TO BE ABANDONED OR REMOVED IN ACCORDANCE WITH N.C. ENVIRONMENTAL HEALTH STANDARDS.

SANITARY SEWER:

1. BACKFLOW PREVENTORS SHALL BE PROVIDED FOR ALL UNITS WITH FINAL FLOOR ELEVATIONS OF BUILDINGS LESS THAN 1'-0" ABOVE UPSTREAM MANHOLE.
2. MINIMUM COVER OF 5 FEET IN TRAFFIC AREAS TO BE PROVIDED FOR ALL COLLECTOR LINES 4 INCHES AND LARGER. IF LESS THAN 5 FEET, DUCTILE IRON PIPE SHALL BE REQUIRED.
3. MINIMUM SLOPE FOR 4 INCH SANITARY SEWER COLLECTION LINES SHALL BE NO LESS THAN 2.0% WITH CLEANOUTS EVERY 75 LINEAL FEET.
4. MINIMUM SLOPE FOR 6 INCH SANITARY SEWER COLLECTION LINES SHALL BE NO LESS THAN 1.0% WITH CLEANOUTS EVERY 75 LINEAL FEET.

WATER:

1. WATERLINES WILL BE 3' OFF CURB AND GUTTER UNLESS SHOWN OTHERWISE.
2. LAY WATER MAINS AT LEAST 10 FEET LATERALLY FROM EXISTING OR PROPOSED SANITARY SEWERS. IF LOCAL CONDITIONS OR BARRIERS PREVENT A 10 FOOT SEPARATION, LAY THE WATER MAIN WITH AT LEAST 18" VERTICAL SEPARATION ABOVE THE TOP OF THE SANITARY SEWER PIPE EITHER IN A SEPARATE TRENCH OR IN THE SAME TRENCH ON A BENCH OF UNDISTURBED EARTH.
3. WHEN A PROPOSED WATER MAIN CROSSES OVER A PROPOSED OR EXISTING SANITARY SEWER, LAY THE WATER MAIN WITH AT LEAST 18" VERTICAL SEPARATION ABOVE THE TOP OF THE SANITARY SEWER. IF LOCAL CONDITIONS PREVENT AN 18" VERTICAL SEPARATION, CONSTRUCT BOTH THE WATER MAIN AND THE SANITARY SEWER FOR A DISTANCE OF 10 FEET ON EACH SIDE TO THE POINT OF CROSSING WITH FERROUS PIPE HAVING WATER MAIN QUALITY JOINTS.
4. WHEN A PROPOSED WATER MAIN CROSSES UNDER A PROPOSED OR EXISTING SANITARY SEWER, CONSTRUCT BOTH THE WATER MAIN AND THE SANITARY SEWER OF FERROUS MATERIALS WITH JOINTS THAT ARE EQUIVALENT TO WATER MAIN STANDARDS FOR A DISTANCE OF 10 FEET ON EACH SIDE OF THE POINT OF CROSSING. CENTER THE SECTION OF WATER PIPE AT THE POINT OF CROSSING.
5. MAINTAIN A MINIMUM COVER OF 36" AND MAXIMUM COVER OF 42" BELOW FINISHED GRADE OVER ALL PIPES UNLESS OTHERWISE DIRECTED OR SHOWN ON THE PLANS. DUE TO THE HEIGHTS OF VALVES, INCREASE THE COVER DEPTHS ADJACENT TO THE VALVES OR VARIED AT POINTS OF TIE-IN TO EXISTING LINES.
6. ALL FDC(S) AND HYDRANT(S) SHALL BE SIAMESE CONNECTIONS AND MEET TOWN OF CHAPEL HILL AND OWASA STANDARDS.
7. A FIRE SPRINKLER SYSTEM WILL BE REQUIRED FOR THE HOTEL.
8. A PERMIT FROM THE CHAPEL HILL FIRE MARSHAL'S OFFICE IS REQUIRED TO INSTALL ANY NEW UNDERGROUND OR ABOVE-GROUND TANKS THAT CONTAINED FLAMMABLE/COMBUSTIBLE LIQUIDS. 2018 NC FIRE CODE SECTION 105.6.17.

2 / C2.1 WATER AND SEWER PLAN NOTES

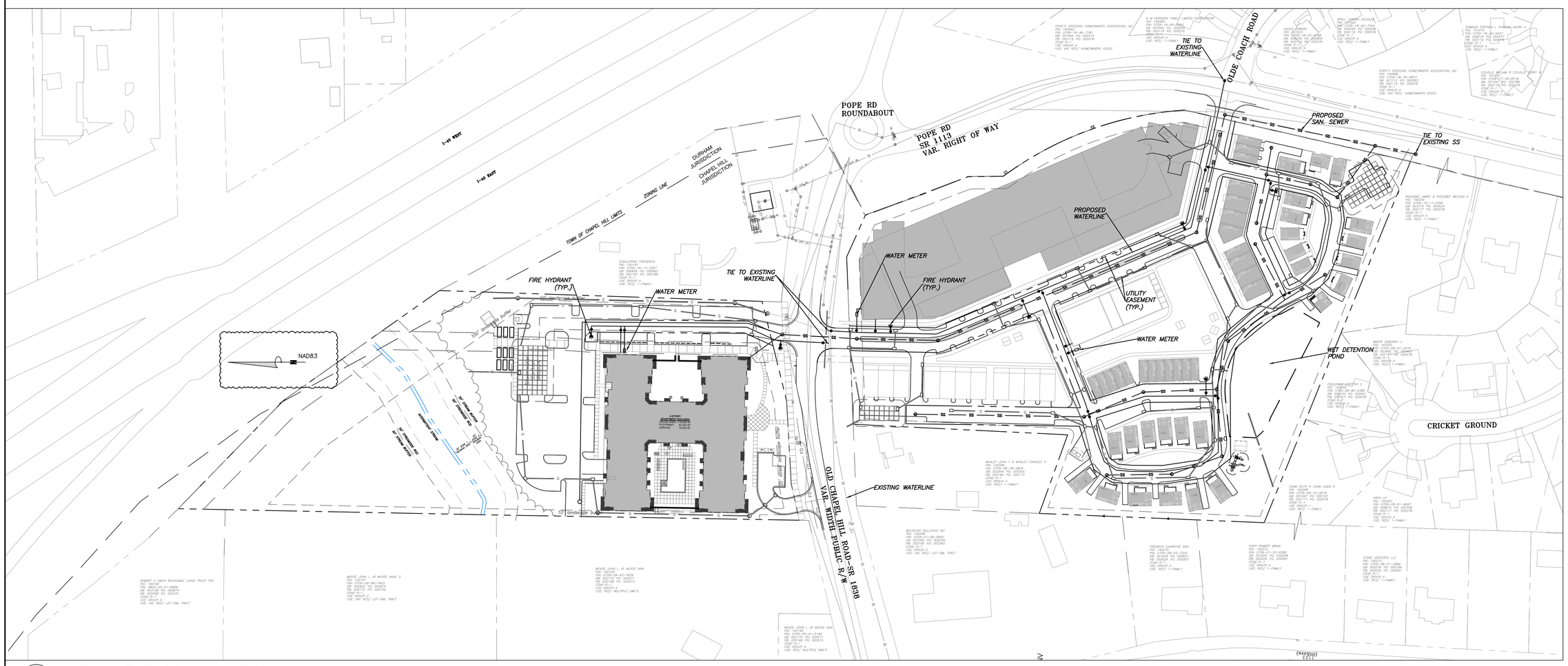

1 / C-2.1 WATER AND SEWER PLAN - OVERALL

SCALE: 1:80

PRELIMINARY NOT FOR CONSTRUCTION

4/5/23

NO.	REVISIONS	BY	DATE
1	TOWN COMMENTS	T&H	4/5/23

THOMAS & HUTTON
111 West Main Street
Durham, NC 27701 • 919.682.0368
www.thomasandhutton.com

EB CAPITAL PARTNERS
CHAPEL HILL, NC

CHAPEL HILL CROSSING

WATER AND SEWER PLAN - OVERALL

JOB NO:	J- 30792
DATE:	2/10/23
DRAWN:	WLR, AMO, MTC
DESIGNED:	WLR, AMO
REVIEWED:	WLR, AMO
APPROVED:	
SCALE:	1:80

C2.1

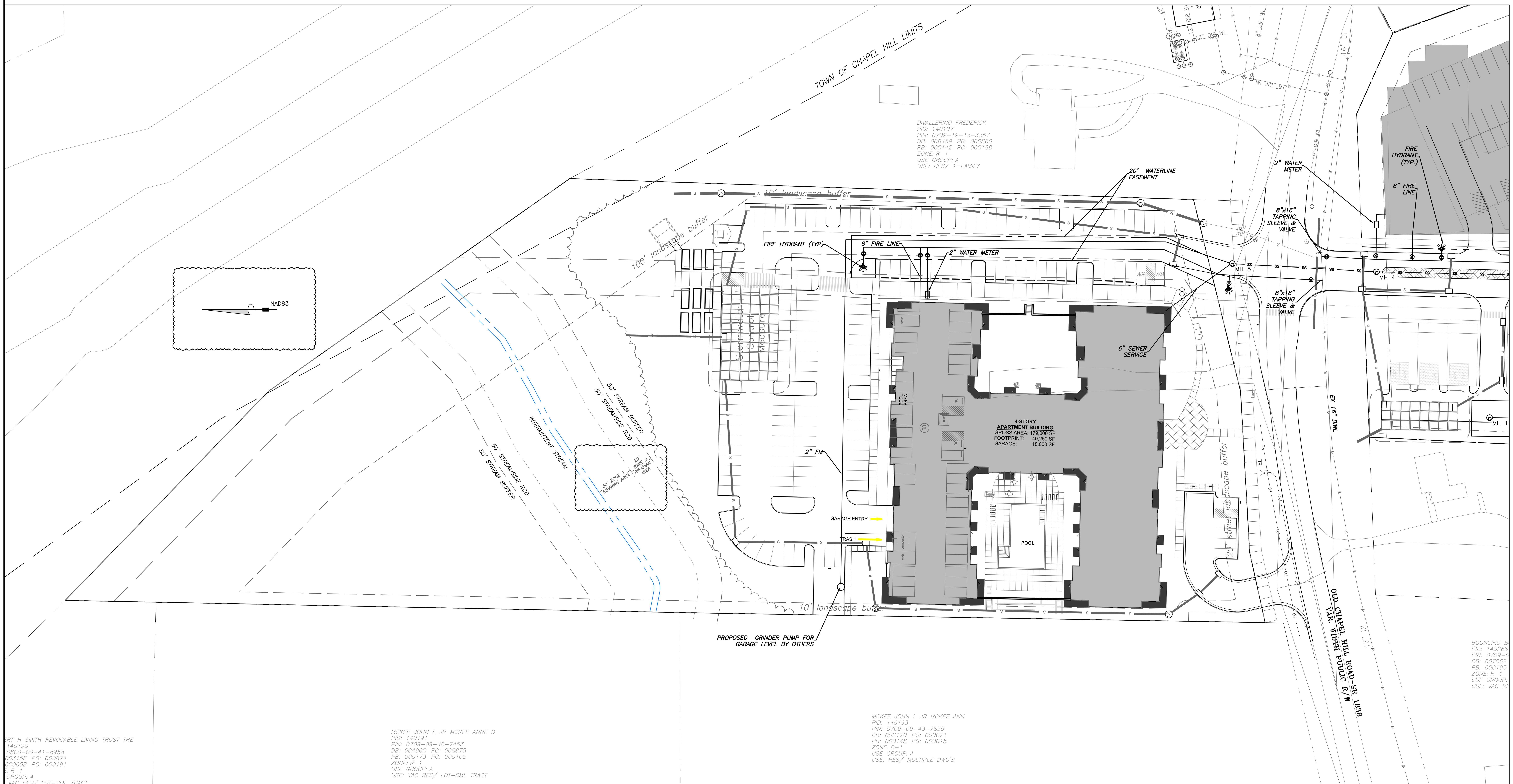

1 C2.2 WATER AND SEWER PLAN - NORTH

SCALE: 1" = 40'

40' 0 40' 80' 120'

Scale 1" = 40'

PRELIMINARY NOT FOR CONSTRUCTION

NORTH CAROLINA PROFESSIONAL ENGINEER SEAL 25505 ANDREW M. OAKLEY 4/5/23

NO.	REVISIONS	BY	DATE
1	TOWN COMMENTS	T&H	4/5/23

THOMAS & HUTTON
111 West Main Street
Durham, NC 27701 • 919.682.0368
www.thomasandhutton.com

EB CAPITAL PARTNERS
CHAPEL HILL, NC

CHAPEL HILL CROSSING

WATER AND SEWER PLAN - NORTH

JOB NO:	J- 30792
DATE:	2/10/23
DRAWN:	WLR, AMO, MTC
DESIGNED:	WLR, AMO
REVIEWED:	WLR, AMO
APPROVED:	
SCALE:	1" = 40'

C2.2

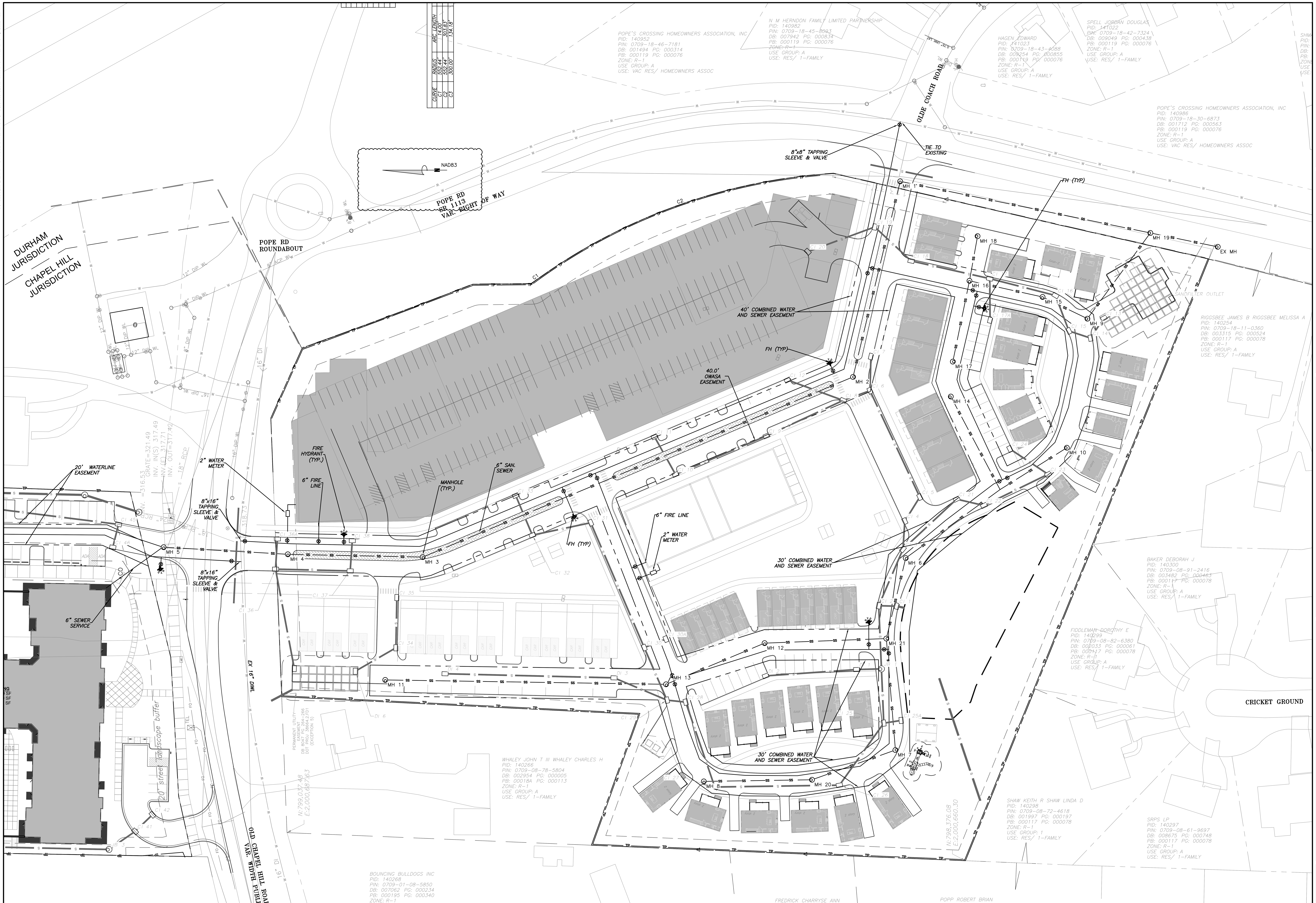

CURVE	RADIUS	ARC LENGTH
C1	552.44'	14.00'
C2	552.44'	303.83'
C3	300.00'	134.18'

1
C2.3

WATER AND SEWER PLAN - SOUTH

SCALE: 1" = 40'

40' 0 40' 80' 120'
Scale 1" = 40'

PRELIMINARY NOT FOR CONSTRUCTION

NORTH CAROLINA PROFESSIONAL SEAL 25505 ENGINEER ANDREW M. OAKLEY 4/5/23

NO.	REVISIONS	BY	DATE
1	TOWN COMMENTS	T&H	4/5/23

THOMAS & HUTTON
111 West Main Street
Durham, NC 27701 • 919.682.0368
www.thomasandhutton.com

EB CAPITAL PARTNERS
CHAPEL HILL, NC

CHAPEL HILL CROSSING

WATER AND SEWER PLAN - SOUTH

JOB NO:	J- 30792
DATE:	2/10/23
DRAWN:	WLR, AMO, MTC
DESIGNED:	WLR, AMO
REVIEWED:	WLR, AMO
APPROVED:	
SCALE:	1" = 40'

C2.3

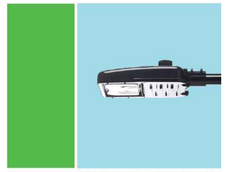

Subject to variance from manufacture. Contact us for region-specific details.

LED (Light Emitting Diode)	220 | 420 watts
Mounting heights	25', 30', 35'

Light source: LED *(white)*
Wattage: 220 | 420
Lumens: 18,500 | 43,000
Light pattern: IESNA Type IV *(forward throw)*
IESNA cutoff classification: Cutoff
Color temperature: LED LIGHT COLOR WILL BE 3000 K

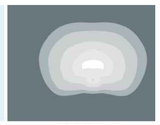

light distribution pattern

2
C2.5
DUKE LED SHOEBOX LIGHT

LIGHTING KEY

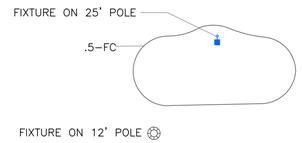

LIGHTING CONDUIT

LIGHTING CONDUIT SHALL MEET THE FOLLOWING GUIDELINES.

1. CONDUIT DESIGN MUST BE APPROVED BY DUKE ENERGY PRIOR TO INSTALLATION. CHANGING THE CONDUIT LAYOUT CAN CAUSE CONDUCTOR LENGTH TO EXCEED ACCEPTABLE VOLTAGE LEVEL WHICH WILL AFFECT THE LIGHT'S ABILITY TO OPERATE.
2. ALL CONDUITS ARE TO BE 2" SCHEDULE 40 GRAY ELECTRICAL PVC.
3. ALL JOINTS ARE TO BE GLUED.
4. ALL ENDS ARE TO BE MARKED WITH SCRAP CONDUIT OR A BOARD (PAINTING THE GROUND WITH MARKING PAINT IS NOT ACCEPTABLE). IT IS STRONGLY SUGGESTED THAT THE ENDS SHOULD BE IDENTIFIED BY GPS COORDINATES.
5. ALL ENDS ARE TO BE CAPPED TO PREVENT ENTRY OF DEBRIS.
6. ALL CONDUITS MORE THAN 30' IN LENGTH SHALL HAVE A STRING INSTALLED.
7. TO COMPLY WITH NESC; ALL CONDUIT ARE TO BE INSTALLED AT A MINIMUM DEPTH OF 30" FROM FINISH GRADE TO TOP OF CONDUIT. CONDUITS THAT CAN NOT MEET THIS CRITERIA MUST BE INCASED IN 3" MINIMUM CONCRETE ENVELOPE. (FLOWABLE FILL IS ACCEPTABLE IN PLACE OF CONCRETE).
8. IF CONCRETE ENCASED CONDUIT IS REQUIRED AT ANY POINT, IT MUST BE ENCASED IN CONCRETE UNTIL PIPE IS BACK DOWN TO REQUIRED DEPTH.
9. PEDESTAL AREAS WHERE MULTIPLE CONDUIT ENDS TERMINATE ARE TO HAVE THE CONDUIT ENDS WITHIN 12" OF EACH OTHER.
10. DIRECT BURIED LIGHT POLE AREAS ARE TO HAVE CONDUITS TERMINATE 36" APART AND 12" BACK OF POLE LOCATION.
11. CONDUITS SERVING LIGHTS ON CONCRETE REVEALS ARE TO BE CONTINUOUS FROM REVEAL TO REVEAL.

LIGHTING NOTES

1. MEASURES SHALL BE PROVIDED TO PREVENT LIGHT SPILLOVER ONTO ADJACENT PROPERTIES AND GLARE TOWARD MOTOR VEHICLE OPERATORS. EXTERIOR LIGHTS SHALL BE SHIELDED SO THEY DO NOT CAST DIRECT LIGHT BEYOND THE PROPERTY LINE.
2. PROVIDE 2" PVC CONDUIT UNDER PAVEMENT, UNDER HEAVILY LANDSCAPED AREAS AS NECESSARY, AND AS DETERMINED BY DUKE ENERGY TO PROVIDE ACCESS TO ALL LIGHT FIXTURES. COORDINATE WITH DUKE ENERGY TO FINALIZE CONDUIT LOCATIONS AND LENGTHS.

SPECIAL COORDINATION NOTES:

1. CONTRACTOR IS TO COORDINATE LIGHT POLE AND CONDUIT LOCATIONS WITH DUKE ENERGY PRIOR TO INSTALLATION OF WALLS AND PAVING.
2. ABOVE GROUND PEDESTALS AND LIGHT POLES WILL BE PROVIDED AND INSTALLED BY DUKE ENERGY.
3. CONTRACTOR IS TO REFER TO DUKE ENERGY SPECIFICATIONS FOR CONDUIT INSTALLATION.
4. CONDUIT IS TO BE FURNISHED AND INSTALLED BY CONTRACTOR.

FINAL LIGHTING NOTES:

1. LIGHTING LAYOUT SHOWN IS CONCEPTUAL. PARKING LOT LIGHTING WILL BE PROVIDED. SIDEWALK LIGHTING WILL BE PROVIDED.
2. LIGHTING FOR PARKING LOTS WILL BE PROVIDED AND INSTALLED BY DUKE ENERGY.
3. ADDITIONAL PEDESTRIAN SCALE LIGHTING WILL BE PROVIDED AND INSTALLED BY GENERAL CONTRACTOR.
4. ALL LIGHTING WILL BE WARM COLOR LED LIGHTING.
5. ALL LIGHTING WILL COMPLY WITH LUMO REQUIREMENTS.
6. LIGHTING PLAN WITH FOOTCANDLE LIGHT DISTRIBUTION WILL BE PROVIDED AT FINAL PLAN STAGE.

3
C2.5
LIGHTING NOTES

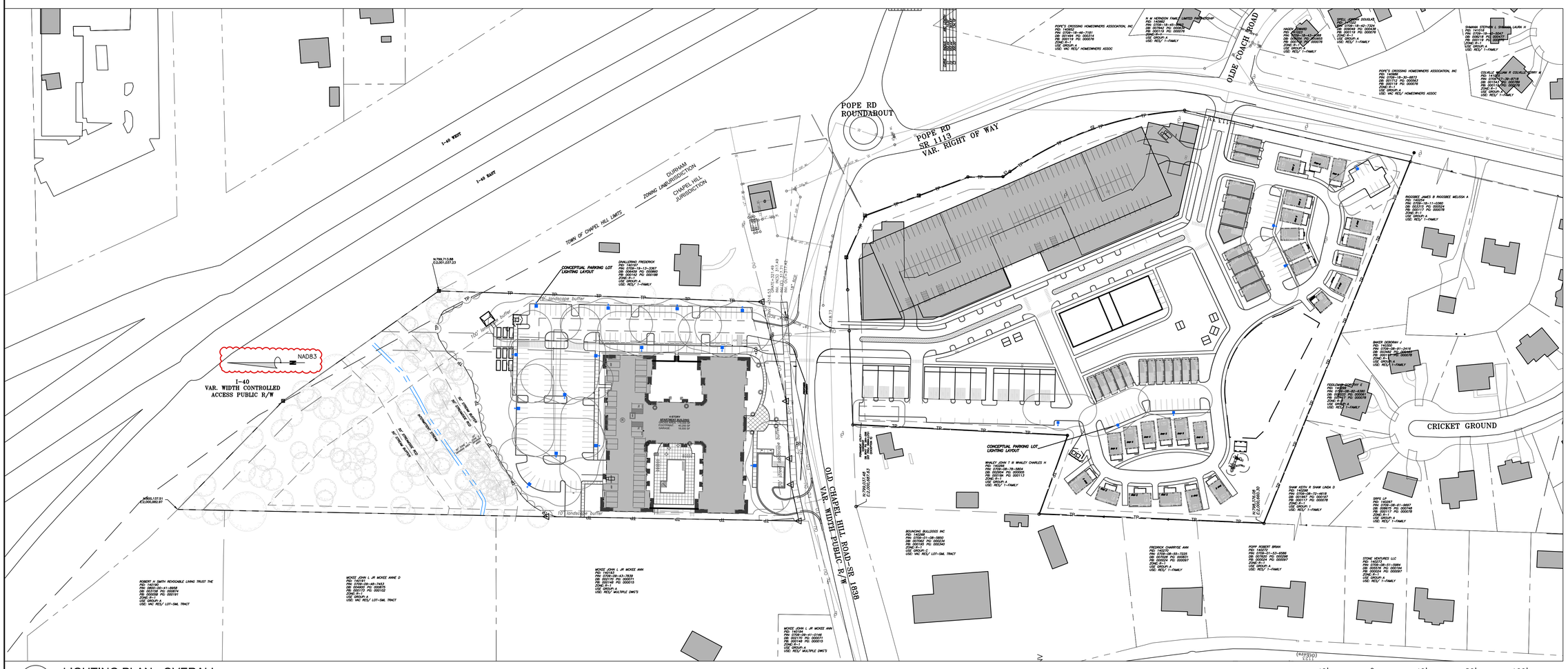

1
C2.5
LIGHTING PLAN - OVERALL

SCALE: 1" = 80'

PRELIMINARY - NOT FOR CONSTRUCTION

NO.	REVISIONS	BY	DATE
1	TOWN COMMENTS	T&H	4/5/23

THOMAS & HUTTON
111 West Main Street
Durham, NC 27701 • 919.682.0368
www.thomasandhutton.com

EB CAPITAL PARTNERS
CHAPEL HILL, NC
CHAPEL HILL CROSSING
LIGHTING PLAN - OVERALL

JOB NO:	J- 30792
DATE:	2/10/23
DRAWN:	WLR, AMO, MTC
DESIGNED:	WLR, AMO
REVIEWED:	WLR, AMO
APPROVED:	
SCALE:	1" = 80'

C2.5

NOTES:

1. WARNING SIGNS SHALL BE MADE OF DURABLE WEATHERPROOF MATERIAL.
2. LETTERS SHALL BE 3" HIGH MINIMUM, CLEARLY LEGIBLE, AND SPACED AS SHOWN.
3. SIGNS ARE TO BE PLACED NO GREATER THAN 100 FT. ON CENTER.
4. PLACE SIGN AT EACH END OF LINEAR TREE PROTECTION AREAS AND 100 FT. ON-CENTER THEREAFTER.
5. FORE TREE PROTECTION AREAS LESS THAN 100 FT. IN PERIMETER, PROVIDE NO LESS THAN ONE SIGN PER AREA.
6. ATTACH SIGNS SECURELY TO FENCE POSTS AND FABRIC.
7. MAINTAIN TREE PROTECTION FENCE THROUGHOUT DURATION OF PROJECT.
8. ADDITIONAL SIGNS MAY BE REQUIRED BASED ON ACTUAL FIELD CONDITIONS.
9. BOTH ENGLISH AND SPANISH SHALL BE USED FOR THE SIGNS.

SIGN DETAIL
NO SCALE

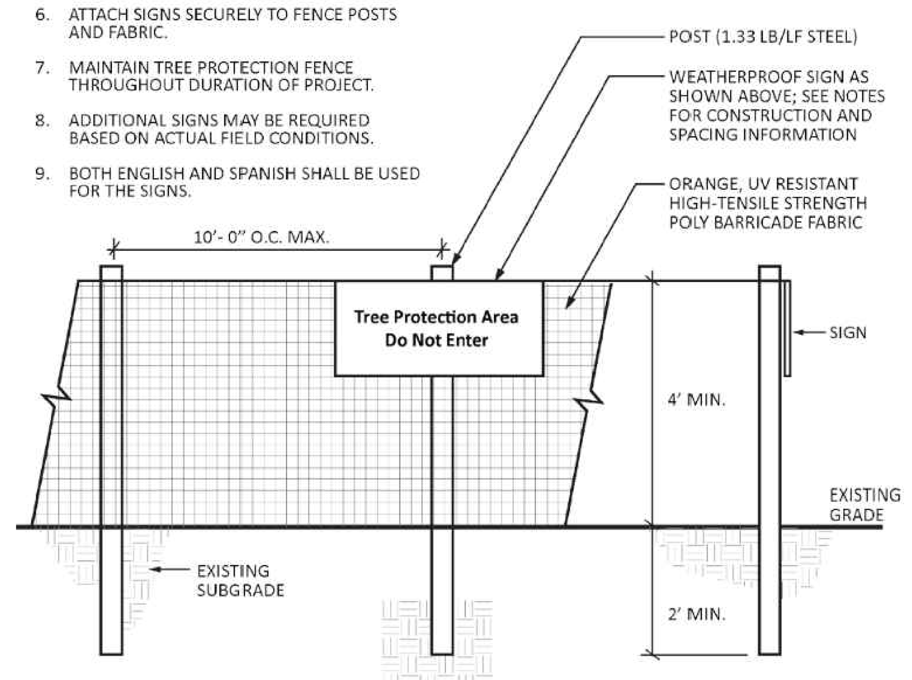

INSTALL TREE PROTECTION FENCE & SIGNAGE PRIOR TO CALLING FOR THE INITIAL ON-SITE INSPECTION

TREE PROTECTION FENCE

2 / C3.0 TREE PROTECTION FENCING DETAIL

1. PRE-CONSTRUCTION CONFERENCE. PRIOR TO THE COMMENCEMENT OF ANY ACTIVITIES REQUIRING A ZONING COMPLIANCE PERMIT, A PRE-CONSTRUCTION CONFERENCE WITH THE TOWN'S URBAN FORESTER OR LANDSCAPE ARCHITECT SHALL TAKE PLACE TO REVIEW PROCEDURES FOR PROTECTION AND MANAGEMENT OF ALL PROTECTED LANDSCAPE ELEMENTS IDENTIFIED ON THE LANDSCAPE PROTECTION PLAN.

2. THE FOLLOWING ON-SITE SUPERVISION IS REQUIRED:
   I. THE APPLICANT SHALL DESIGNATE AS LANDSCAPE PROTECTION SUPERVISORS ONE OR MORE PERSONS WHO HAVE COMPLETED INSTRUCTION IN LANDSCAPE PROTECTION PROCEDURES WITH THE TOWN.
   II. IT SHALL BE THE DUTY OF THE LANDSCAPE PROTECTION SUPERVISOR TO ENSURE THE PROTECTION OF NEW OR EXISTING LANDSCAPE ELEMENTS, AS DEFINED IN THE LANDSCAPE PROTECTION PLAN. THE APPROVED LANDSCAPE PROTECTION SUPERVISOR SHALL SUPERVISE ALL SITE WORK TO ASSURE THAT DEVELOPMENT ACTIVITY CONFORMS TO PROVISIONS OF THE APPROVED LANDSCAPE PROTECTION PLAN. AT LEAST ONE (1) IDENTIFIED LANDSCAPE PROTECTION SUPERVISOR SHALL BE PRESENT ON THE DEVELOPMENT SITE AT ALL TIMES WHEN ACTIVITY THAT COULD DAMAGE OR DISTURB SOIL AND ADJACENT LANDSCAPE ELEMENTS OCCURS SUCH AS:
      - CLEARING AND GRUBBING;
      - ANY EXCAVATION, GRADING, TRENCHING OR MOVING OF SOIL;
      - REMOVAL, INSTALLATION, OR MAINTENANCE OF ALL LANDSCAPE ELEMENTS AND LANDSCAPE PROTECTION DEVICES; OR
      - DELIVERY, TRANSPORTING, AND PLACEMENT OF CONSTRUCTION MATERIALS AND EQUIPMENT ON SITE.

3. LANDSCAPING ACTIVITIES TAKING PLACE AFTER THE REMOVAL OF PROTECTIVE FENCING SHALL BE ACCOMPLISHED WITH LIGHT MACHINERY OR HAND LABOR AND IN ACCORDANCE WITH THE TOWN'S LANDSCAPING STANDARDS AND SPECIFICATIONS.

3 / C3.0 TREE PROTECTION NOTES

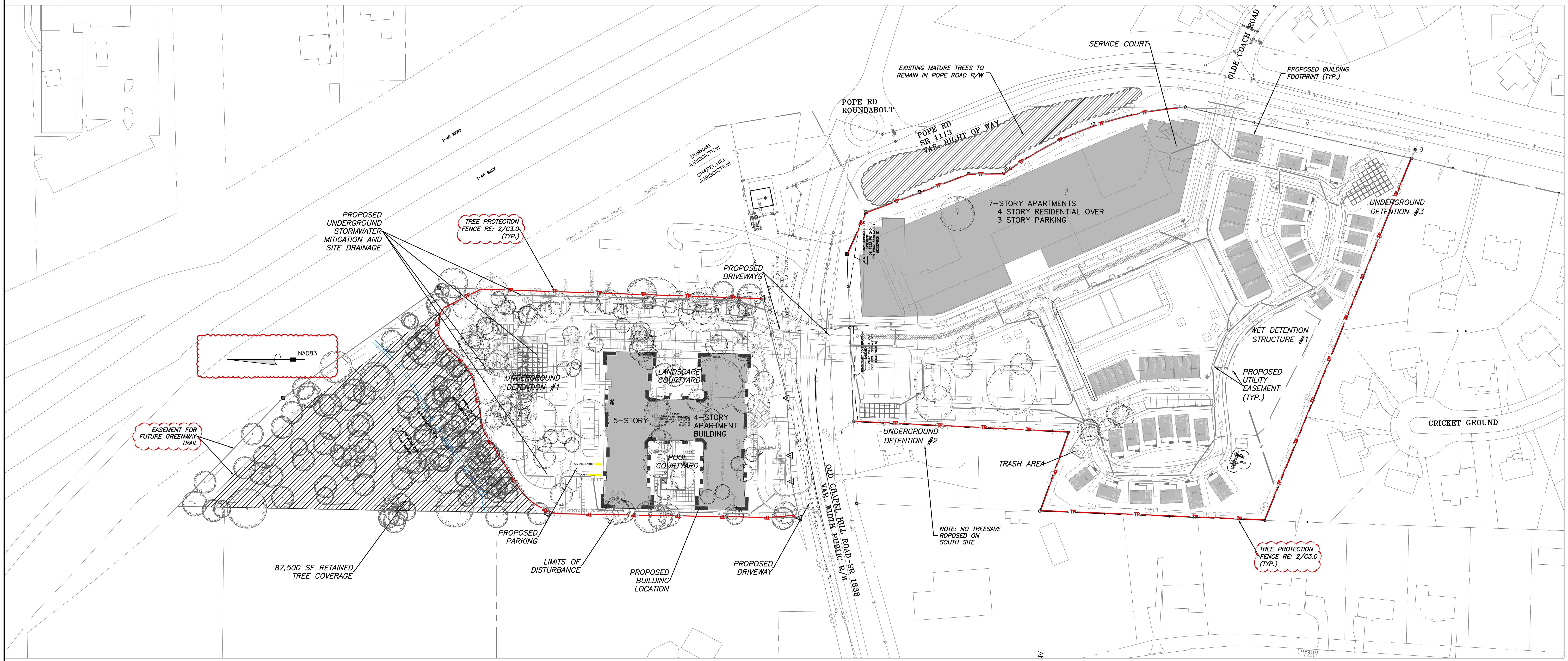

1 / C3.0 LANDSCAPE PROTECTION PLAN

SCALE: 1" = 80'

40' 0 40' 80' 120'

Scale 1" = 80'

PRELIMINARY NOT FOR CONSTRUCTION

NORTH CAROLINA PROFESSIONAL ENGINEER SEAL 25505 ANDREW M. OAKLEY 4/5/23

NO.	REVISIONS	BY	DATE
1	TOWN COMMENTS	T&H	4/5/23

THOMAS & HUTTON
111 West Main Street
Durham, NC 27701 • 919.682.0368
www.thomasandhutton.com

EB CAPITAL PARTNERS
CHAPEL HILL, NC

CHAPEL HILL CROSSING

LANDSCAPE PROTECTION PLAN

JOB NO:	J- 30792
DATE:	2/10/23
DRAWN:	WLR, AMO, MTC
DESIGNED:	WLR, AMO
REVIEWED:	WLR, AMO
APPROVED:	
SCALE:	1" = 80'

C3.0

1. ALL DIMENSIONS AND GRADES SHOWN ON THE PLANS SHALL BE FIELD VERIFIED BY THE CONTRACTOR PRIOR TO CONSTRUCTION. CONTRACTOR SHALL NOTIFY THE OWNER IF ANY DISCREPANCIES EXIST PRIOR TO PROCEEDING WITH CONSTRUCTION FOR NECESSARY PLAN OR GRADE CHANGES. NO EXTRA COMPENSATION SHALL BE PAID TO THE CONTRACTOR FOR ANY WORK DONE DUE TO DIMENSIONS OR GRADES SHOWN INCORRECTLY ON THESE PLANS IF SUCH NOTIFICATION HAS NOT BEEN GIVEN.

2. ALL CONSTRUCTION SHALL BE IN ACCORDANCE WITH TOWN OF CHAPEL HILL AND NCDOT STANDARDS AND SPECIFICATIONS.

3. CONTRACTOR SHALL NOTIFY "NORTH CAROLINA ONE CALL" (1-800-632-4949) AT LEAST 48 HOURS PRIOR TO BEGINNING CONSTRUCTION OR EXCAVATION TO HAVE EXISTING UTILITIES LOCATED. CONTRACTOR TO CONTACT ANY LOCAL UTILITIES THAT PROVIDE THEIR OWN LOCATOR SERVICES INDEPENDENT OF "NORTH CAROLINA ONE CALL".

4. CONSTRUCTION, MAINTENANCE AND REMOVAL OF ALL EROSION CONTROL DEVICES ARE THE RESPONSIBILITY OF THE GENERAL CONTRACTOR.

5. EXISTING UTILITIES AND STRUCTURES SHOWN, BOTH UNDERGROUND AND ABOVE GROUND, ARE BASED ON A FIELD SURVEY AND THE BEST AVAILABLE RECORD DRAWINGS. THE CONTRACTOR SHALL VERIFY FIELD CONDITIONS PRIOR TO BEGINNING RELATED CONSTRUCTION. ANY DISCREPANCIES SHALL BE REPORTED TO THE OWNER'S REPRESENTATIVE IMMEDIATELY.

6. SOIL UNDER BUILDING PAD, PAVED AREAS AND WITHIN SLOPES GREATER THAN 3:1 (H:V) SHALL BE APPROVED, PLACED AND COMPACTED AS RECOMMENDED BY THE GEOTECHNICAL ENGINEER. THESE SOILS SHALL BE COMPACTED AS SPECIFIED UNLESS OTHERWISE RECOMMENDED BY THE GEOTECHNICAL ENGINEER. ANY UNDERCUT OF SOILS IN THESE AREAS SHALL BE APPROVED BY THE GEOTECHNICAL ENGINEER & OWNER. THE UNDERCUT SOILS SHALL ALSO QUANTIFIED BY THE GEOTECHNICAL ENGINEER.

7. ALL GRADING MUST PRODUCE SURFACE DRAINAGE ADEQUATE TO PREVENT STANDING WATER OR WET LAWN AREAS, AND TO ENSURE THAT ALL STORM WATER FLOWS TO INLETS OR OTHER POINTS OF DISCHARGE.

8. ALL SIDEWALKS SHALL BE CONSTRUCTED WITH A MAXIMUM 1.8% CROSS SLOPE IN THE DIRECTION SHOWN ON THE PLAN.

9. CONNECT ALL ROOF LEADERS AND DOWNSPOUTS TO STORM DRAINAGE SYSTEM WITH PVC PIPE. SEE ARCHITECTURAL PLANS FOR LOCATIONS.

10. CURB INLETS: PROVIDE PRE-CAST CURB INLET HOODS AND COVERS STATING, "DUMP NO WASTE! DRAINS TO JORDAN LAKE", IN ACCORDANCE WITH THE SPECIFICATIONS OF THE TOWN STANDARD DETAIL SD-5A, FOR ALL NEW CURB INLETS FOR PRIVATE, TOWN AND STATE RIGHTS-OF-WAY.

11. BW (BOTTOM OF WALL) ELEVATION IS FINISH GRADE, NOT THE FOOTING. REFERENCE RETAINING WALL PLANS/DETAILS FOR DEPTH OF FOOTING.

12. ANY DISTURBANCE WITHIN THE FORESTED "NO LAND DISTURBANCE AREA" WILL REQUIRE AN UPDATE TO THE JORDAN ACCOUNTING TOOL.

2 / C3.1 GRADING NOTES

1. ALL STORM DRAINAGE PIPES SHOWN ARE TO BE CLASS III REINFORCED CONCRETE (RCP) UNLESS NOTED OTHERWISE.

2. ALL STORM DRAINAGE CONSTRUCTION SHALL BE IN ACCORDANCE WITH THE TOWN OF CHAPEL HILL AND NCDOT STANDARDS.

3. ALL CONCRETE SHALL MEET A MINIMUM 3000 PSI COMPRESSIVE STRENGTH.

4. ALL PIPE IN STORM DRAIN STRUCTURES SHALL BE STRUCK EVEN WITH INSIDE WALL.

5. ALL PIPE JOINTS SHALL BE MADE WITH PREFORMED JOINT SEALER, WHICH CONFORMS TO AASHTO SPECIFICATION M-198 FOR TYPE B FLEXIBLE PLASTIC GASKETS UNLESS OTHERWISE NOTED.

6. THE INTERIOR SURFACES OF ALL STORM DRAINAGE STRUCTURES SHALL BE POINTED AND SMOOTHED TO AN ACCEPTABLE STANDARD USING MORTAR MIXED TO MANUFACTURER'S SPECIFICATIONS.

7. ALL BACKFILL SHALL BE NON-PLASTIC IN NATURE, FREE FROM ROOTS, VEGETATION MATTER, WASTE CONSTRUCTION MATERIAL OR OTHER OBJECTIONABLE MATERIAL. SAID MATERIAL SHALL BE CAPABLE OF BEING COMPACTED BY MECHANICAL MEANS AND SHALL HAVE NO TENDENCY TO FLOW OR BEHAVE IN A PLASTIC MANNER UNDER THE TAMPING BLOWS OR PROOF ROLLING.

8. MATERIALS DEEMED BY THE OWNER'S REPRESENTATIVE AS UNSUITABLE FOR BACKFILL PURPOSES SHALL BE REMOVED AND REPLACED WITH SUITABLE MATERIAL.

9. BACKFILLING OF TRENCHES SHALL BE ACCOMPLISHED IMMEDIATELY AFTER PIPE IS LAID. THE FILL AROUND THE PIPE SHALL BE THOROUGHLY COMPACTED TO 95% OF THE MAXIMUM DRY DENSITY OBTAINABLE WITH THE STANDARD PROCTOR TEST. THE TOP EIGHT (8) INCHES SHALL BE COMPACTED TO 100% STANDARD PROCTOR.

10. UNDER NO CIRCUMSTANCES SHALL WATER BE ALLOWED TO RISE IN UNBACKFILLED TRENCHES AFTER PIPE HAS BEEN PLACED.

11. RISER STRUCTURES WITH MULTIPLE BARREL SECTIONS SHALL HAVE GASKETTED JOINTS, AND EACH SECTION SHALL BE BOLTED TO ADJACENT SECTIONS WITH STAINLESS STEEL STRAPS.

3 / C3.1 STORMWATER NOTES

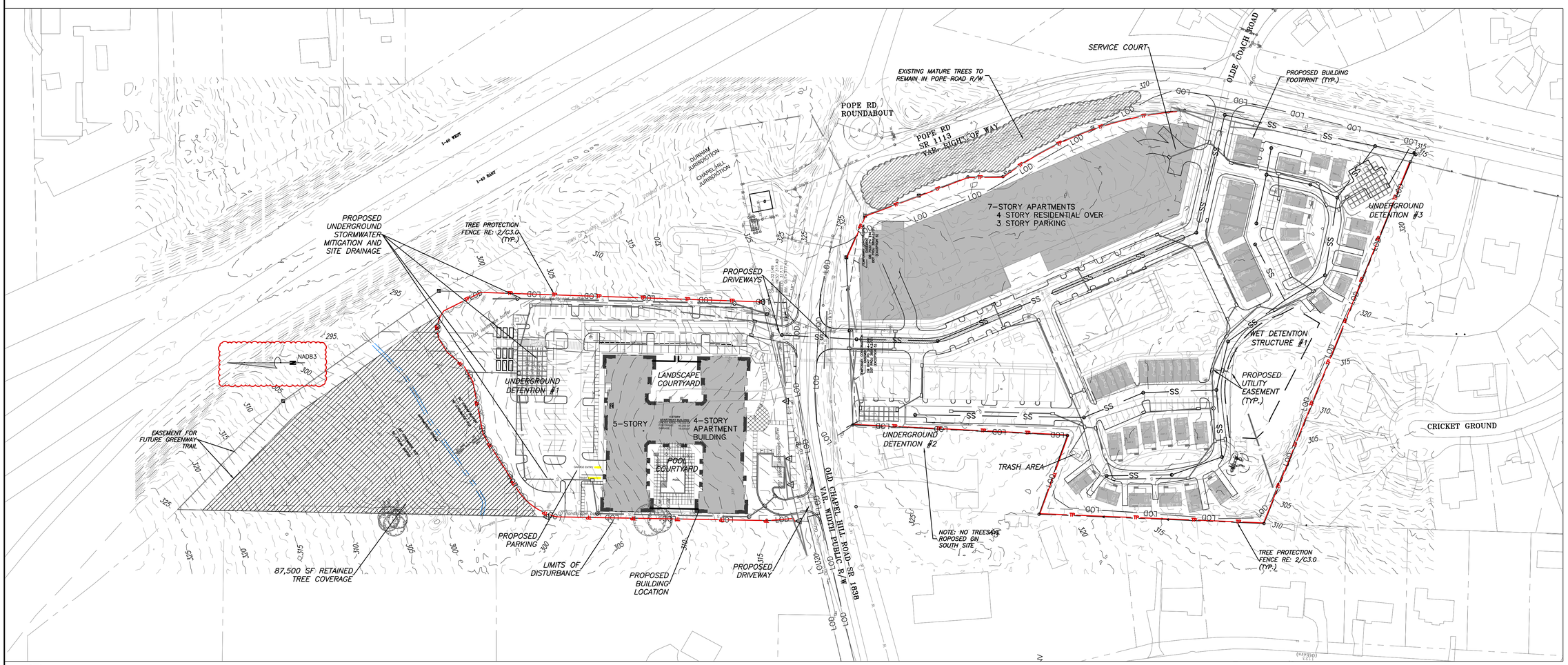

1 / C3.1 GRADING AND DRAINAGE PLAN - OVERALL

SCALE: 1" = 80'

PRELIMINARY NOT FOR CONSTRUCTION

NO.	REVISIONS	BY	DATE
1	TOWN COMMENTS	T&H	4/5/23

THOMAS & HUTTON
111 West Main Street
Durham, NC 27701 • 919.682.0368
www.thomasandhutton.com

EB CAPITAL PARTNERS
CHAPEL HILL, NC

CHAPEL HILL CROSSING

GRADING AND DRAINAGE PLAN - OVERALL

JOB NO:	J- 30792
DATE:	2/10/23
DRAWN:	WLR, AMO, MTC
DESIGNED:	WLR, AMO
REVIEWED:	WLR, AMO
APPROVED:	
SCALE:	1" = 80'

C3.1

Water Valve	⊗	Utility Pole	
Yard Inlet		Guy Wire	
Curb Inlet/Catch Basin		Light Pole	LP
Mail Box	MB	Sewer Cleanout	CO
Traffic Signal Box	TSB	Flared End Section	
Electric Transformer	T	Gas Valve	GV
Electric Junction Box	E	Existing Iron Pipe (3/4" unless noted)	○
Gas Meter	G	1/2" Rebar	●
Sanitary Sewer Manhole		1/2" Iron Pipe Set	IPS
Storm Sewer Manhole		Existing PK Nail	PK
Telephone Manhole		PK Nail Set	PKS
Electric Manhole		Computed Point	△
Sign		Concrete Monument	⊠
Telephone Pedestal	TEL	Tree Line	
Fire Hydrant		Fence	x
Fire Department Connection	FDC	Underground Electric	UE
Post Indicator Valve		Underground Telephone	UT
Water Meter	W	Gas Line	GAS
Hot Box	HB	Water Line	W
		Overhead Utilities	OU
		Storm Sewer	S
		Sanitary Sewer	SS

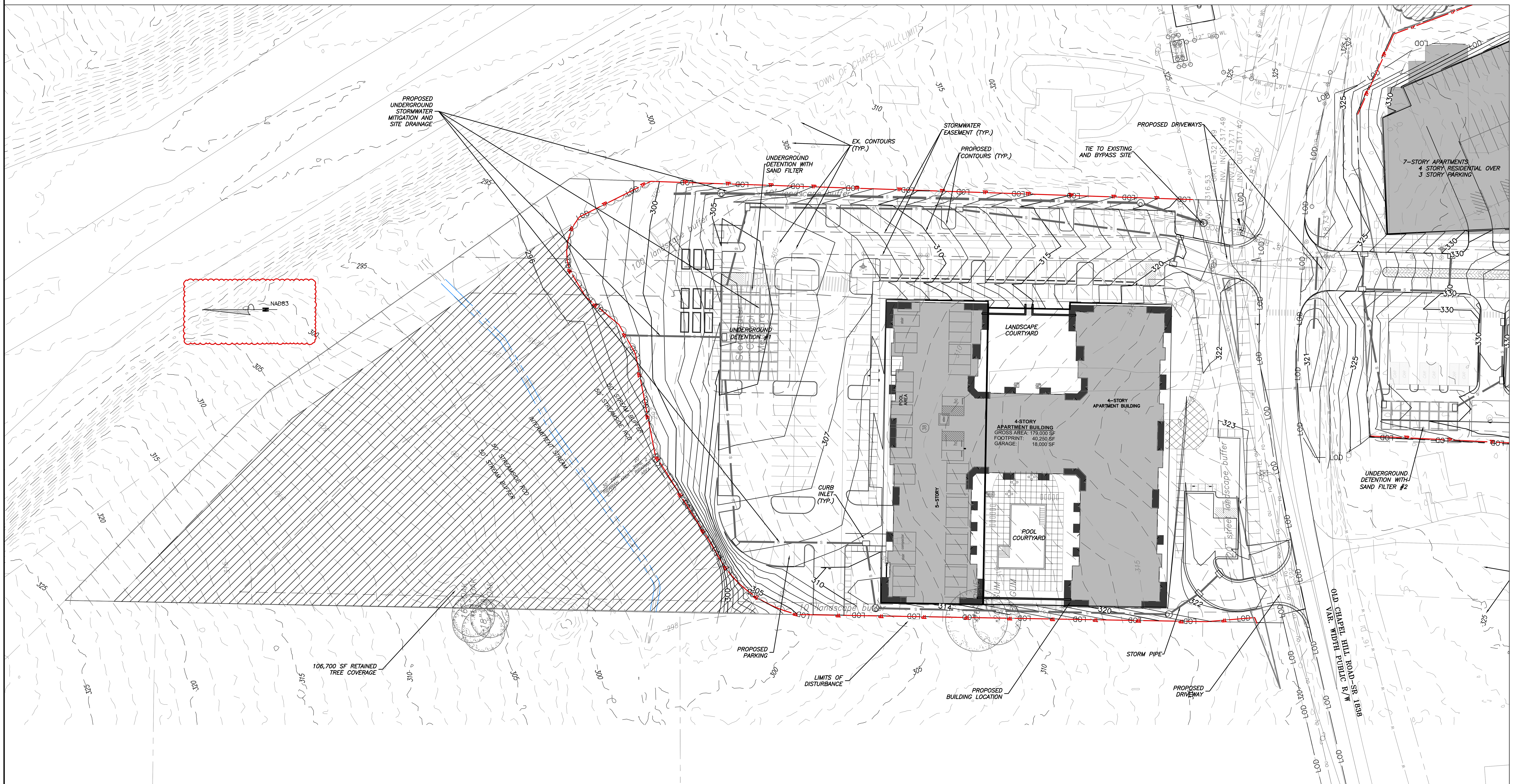

1
C3.2
GRADING AND DRAINAGE PLAN - NORTH
SCALE: 1" = 40'

40' 0 40' 80' 120'
Scale 1" = 40'

PRELIMINARY NOT FOR CONSTRUCTION

NORTH CAROLINA PROFESSIONAL SEAL 25505 ENGINEER ANDREW M. OAKLEY 4/5/23

NO.	REVISIONS	BY	DATE
1	TOWN COMMENTS	T&H	4/5/23

THOMAS & HUTTON
111 West Main Street
Durham, NC 27701 • 919.682.0368
www.thomasandhutton.com

EB CAPITAL PARTNERS
CHAPEL HILL, NC

CHAPEL HILL CROSSING

GRADING AND DRAINAGE PLAN - NORTH

JOB NO:	J- 30792
DATE:	2/10/23
DRAWN:	WLR, AMO, MTC
DESIGNED:	WLR, AMO
REVIEWED:	WLR, AMO
APPROVED:	
SCALE:	1" = 40'

C3.2

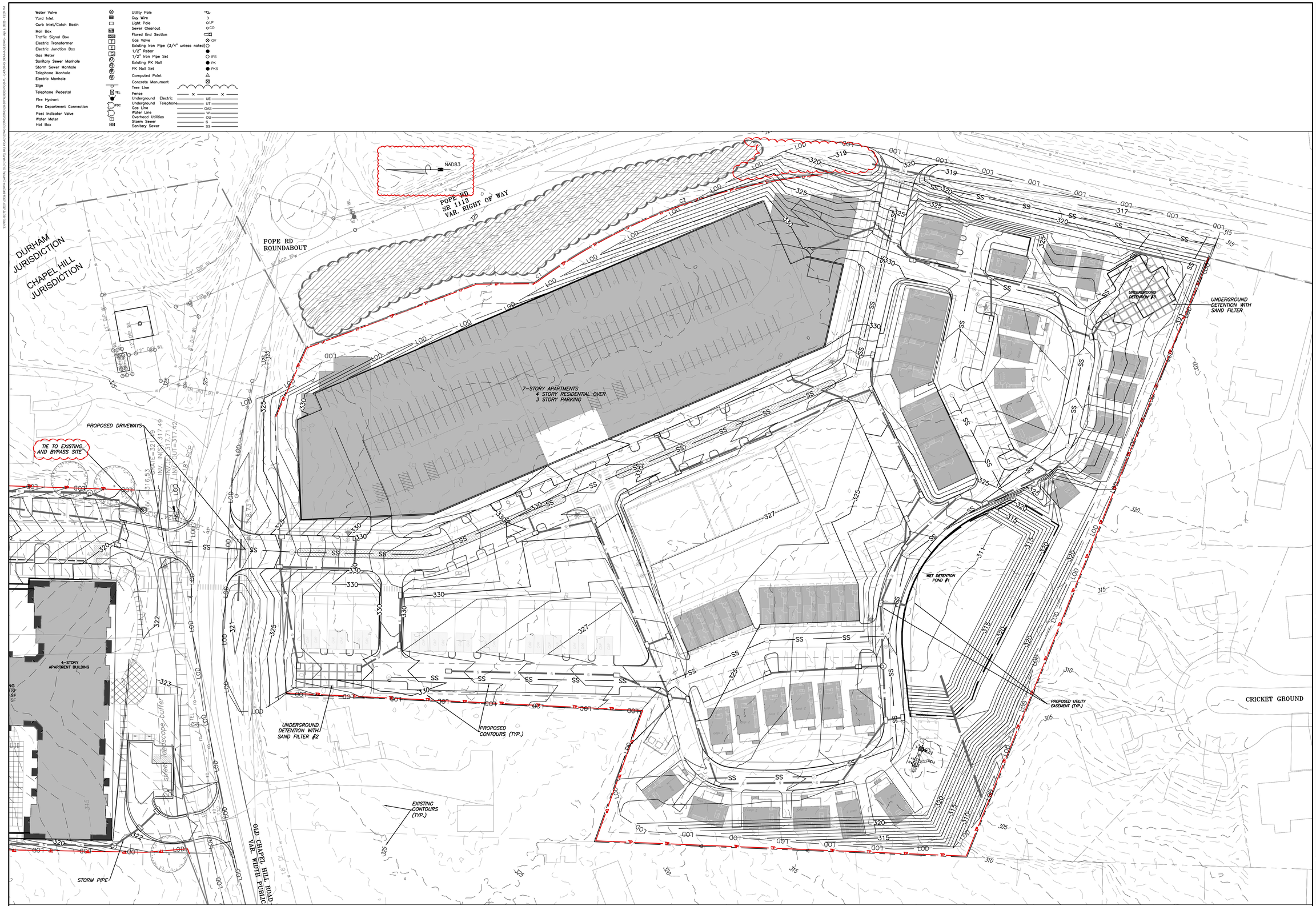

1 C3.3 GRADING AND DRAINAGE PLAN - SOUTH

SCALE: 1" = 40'

PRELIMINARY NOT FOR CONSTRUCTION

4/5/23

NO.	REVISIONS	BY	DATE
1	TOWN COMMENTS	T&H	4/5/23

THOMAS & HUTTON
111 West Main Street
Durham, NC 27701 • 919.682.0368
www.thomasandhutton.com

EB CAPITAL PARTNERS
CHAPEL HILL, NC

CHAPEL HILL CROSSING

GRADING AND DRAINAGE PLAN - SOUTH

JOB NO:	J- 30792
DATE:	2/10/23
DRAWN:	WLR, AMO, MTC
DESIGNED:	WLR, AMO
REVIEWED:	WLR, AMO
APPROVED:	
SCALE:	1" = 40'

C3.3

–CONTRACTION JOINTS SHALL BE SPACED AT 10 FOOT INTERVALS. EXCEPT THAT A 15 FOOT SPACING MAY BE USED WHEN A MACHINE IS USED OR WHEN SATISFACTORY SUPPORT FOR THE FACE FORM CAN BE OBTAINED WITHOUT THE USE OF TEMPLATES AT 10 FOOT INTERVALS. JOINT SPACING MAY BE ALTERED BY THE ENGINEER TO PREVENT UNCONTROLLED CRACKING.
–CONTRACTION JOINTS MAY BE INSTALLED BY THE USE OF TEMPLATES OR FORMED BY OTHER APPROVED METHODS. WHERE SUCH JOINTS ARE NOT FORMED BY TEMPLATES, A MINIMUM DEPTH OF 1 1/2" SHALL BE MAINTAINED.
–ALL CONTRACTION JOINTS SHALL BE FILLED WITH JOINT FILLER.
–JOINTS SHALL MATCH LOCATIONS WITH JOINT IN ABUTTING SIDEWALK.
–EXPANSION JOINTS SHALL BE SPACED AT 90 FOOT INTERVALS AND ADJACENT TO ALL RIGID OBJECTS.

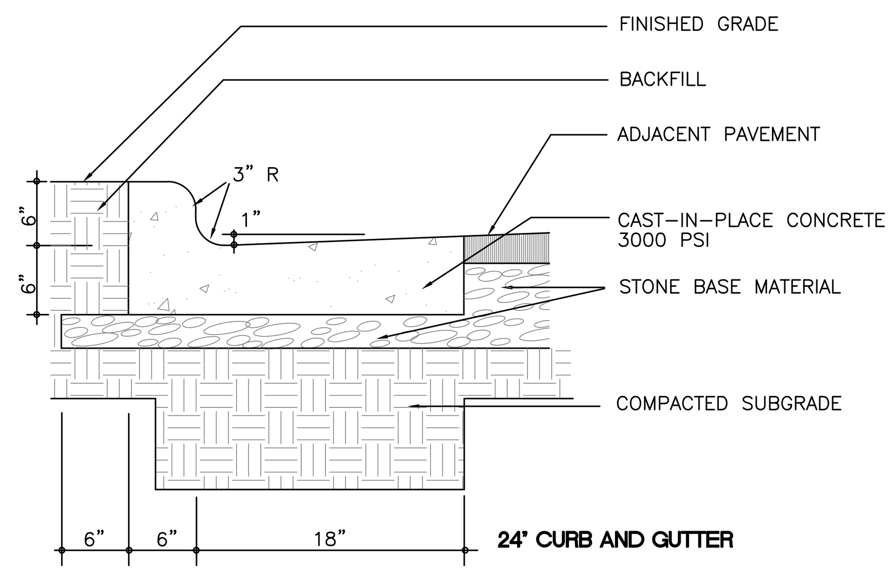

NOTE THAT THIS DETAIL DOES NOT MEET NC DOT REQUIREMENTS. ANY CURB AND GUTTER TO BE CONSTRUCTED IN THE HOMESTEAD ROAD RIGHT OF WAY IS TO FOLLOW NC DOT STANDARDS RE: 2/C800

1 C3.4 ON SITE CURB & GUTTER
no scale

–CONTRACTION JOINTS SHALL BE SPACED AT 10 FOOT INTERVALS. EXCEPT THAT A 15 FOOT SPACING MAY BE USED WHEN A MACHINE IS USED OR WHEN SATISFACTORY SUPPORT FOR THE FACE FORM CAN BE OBTAINED WITHOUT THE USE OF TEMPLATES AT 10 FOOT INTERVALS. JOINT SPACING MAY BE ALTERED BY THE ENGINEER TO PREVENT UNCONTROLLED CRACKING.
–CONTRACTION JOINTS MAY BE INSTALLED BY THE USE OF TEMPLATES OR FORMED BY OTHER APPROVED METHODS. WHERE SUCH JOINTS ARE NOT FORMED BY TEMPLATES, A MINIMUM DEPTH OF 1 1/2" SHALL BE MAINTAINED.
–ALL CONTRACTION JOINTS SHALL BE FILLED WITH JOINT FILLER.
–JOINTS SHALL MATCH LOCATIONS WITH JOINT IN ABUTTING SIDEWALK.
–EXPANSION JOINTS SHALL BE SPACED AT 90 FOOT INTERVALS AND ADJACENT TO ALL RIGID OBJECTS.

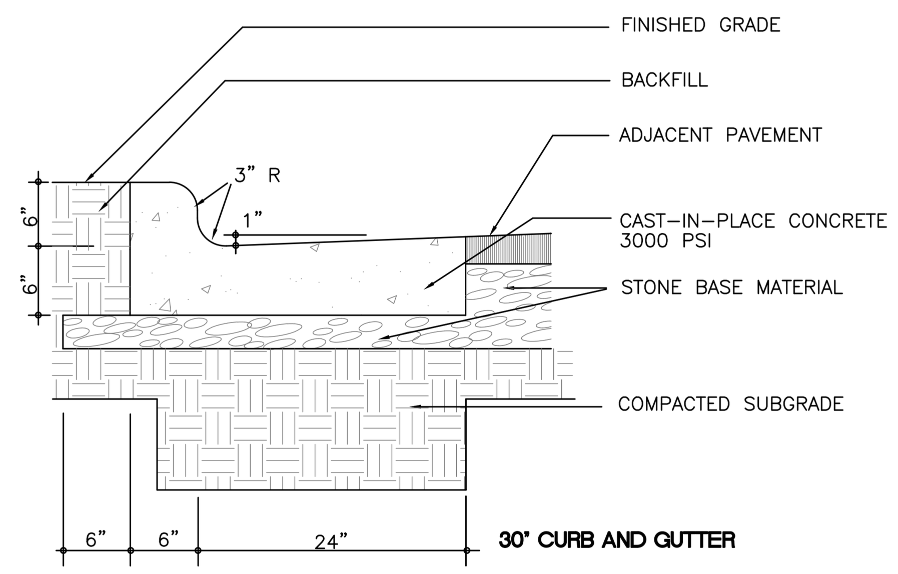

2 C3.4 OFF SITE CURB & GUTTER
no scale

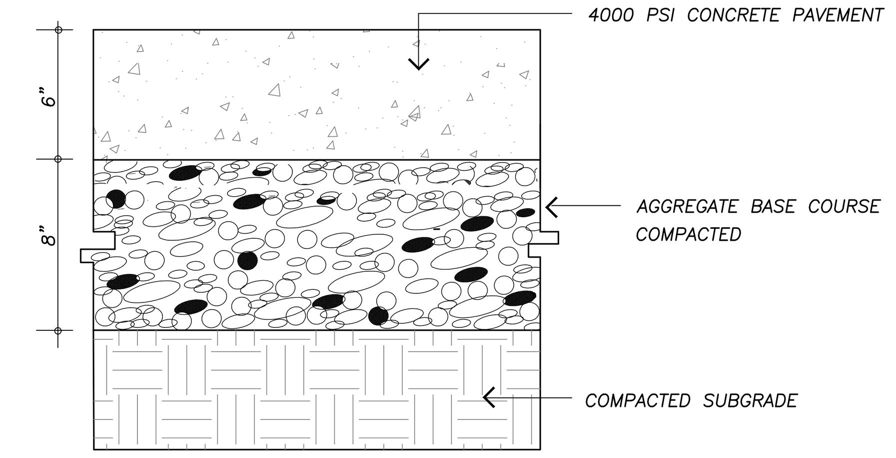

NOTES:

1. ALL CONCRETE TO 4000 PSI, PROPERLY AIR ENTRAINED FOR EXTERIOR GRADE CONCRETE MIXES.
2. CABC BASE AND SOIL SUBGRADE TO BE COMPACTED TO 98% OF THE ASTM D-698 STD. PROCTOR MDD IN ACCORDANCE WITH THE REPORT BY THE GEOTECHNICAL ENGINEER AND PROOFROLLED AND APPROVED BY GEOTECHNICAL PERSONNEL.
3. CONTRACTOR SHALL INSTALL CONTRACTION AND EXPANSION JOINTS AS NECESSARY TO MINIMIZE CRACKING. CONTRACTION JOINTS SHALL BE SPACED AT 10' MAXIMUM EACH WAY WITH ACTUAL PATTERN BASED ON FIELD CONDITIONS. JOINTS SHALL BE TOOLED OR SAW CUT TO A MINIMUM DEPTH OF 2". EXPANSION JOINTS SHALL BE INSTALLED BETWEEN PAVEMENT AND ANY RIGID OBJECTS AND SPACED AS SPECIFIED IN LATEST VERSION OF ACI STANDARDS.
4. ALL PAVEMENT CONSTRUCTION SHALL BE IN ACCORDANCE WITH LATEST VERSION OF ACI STANDARDS AND THE REPORT BY THE GEOTECHNICAL ENGINEER.

3 C3.4 HEAVY DUTY CONCRETE PAVING
no scale

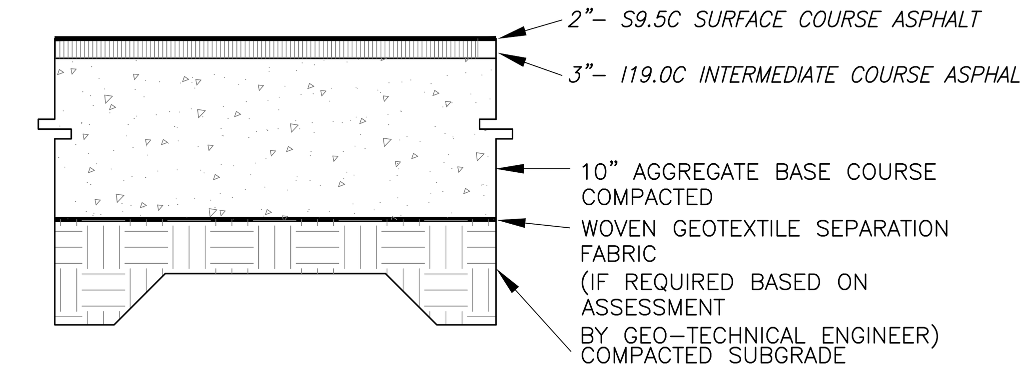

FINAL PAVEMENT SECTION IS PROVIDED BY GEO–TECHNICAL ENGINEER BASED SITE SPECIFIC GEO–TECHNICAL REPORT

3 C3.4 HEAVY DUTY ASPHALT PAVING
no scale

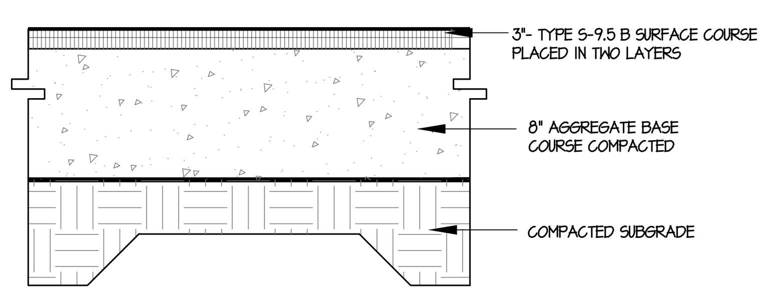

FINAL PAVEMENT SECTION IS PROVIDED BY GEO–TECHNICAL ENGINEER BASED SITE SPECIFIC GEO–TECHNICAL REPORT

5 C3.4 STANDARD ASPHALT PAVING
no scale

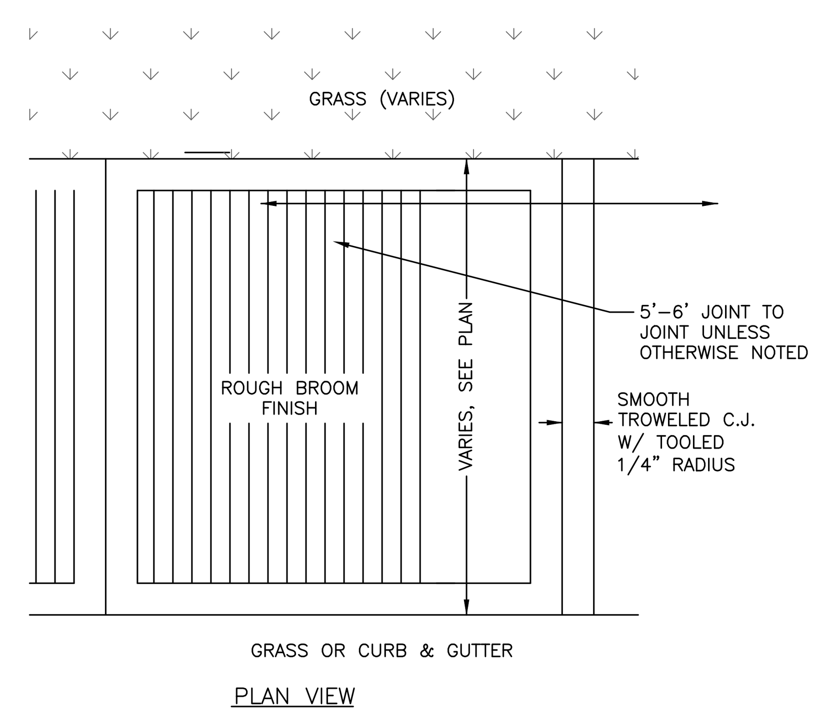

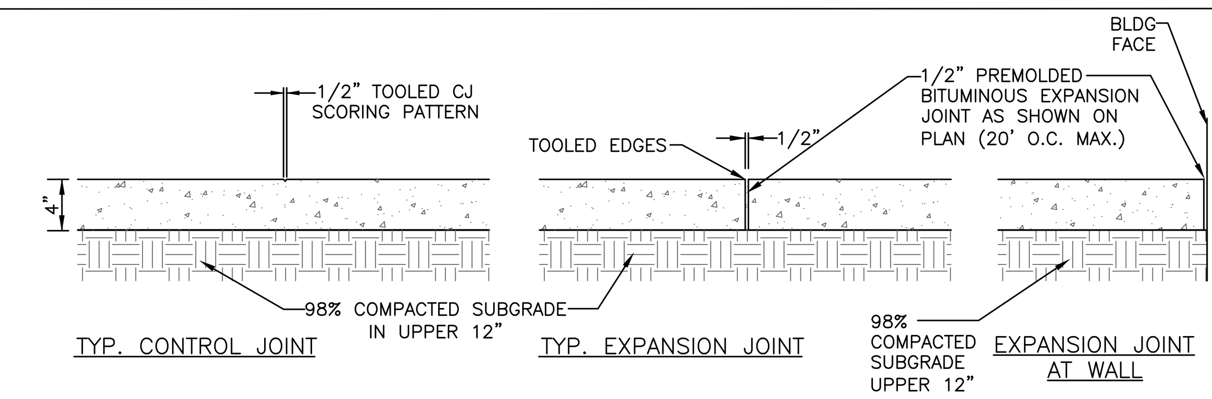

NOTES:

1) 4" THICK CONC., 3000 PSI MIN.
2) ALL SIDEWALK ARE TO HAVE MAXIMUM 1.8% CROSS SLOPE
3) USE 1/2" BITUMINOUS EXPANSION JOINT A MAX. OF 20' O.C. AND WHENEVER CONCRETE WALK MEETS FIXED OBJECTS (IE. CURBS, BLDG. ETC.). EXPANSION JOINTS THAT ABUT BUILDINGS WALL SHALL BE SEALED WITH A FOAM BACKER ROD AND ELASTOMERIC SEALANT.
ALL CONSTRUCTION JOINTS AND EXPANSION JOINTS IN NCDOT RIGHT–OF–WAY SHALL BE SEALED PER NCDOT STANDARDS AND SPECIFICATION.
4) ALL SIDEWALKS SHALL BE CONSTRUCTED WITH TOOLED 1/4" EDGE RADIUS.

6 C3.4 ON SITE CONCRETE SIDEWALK
no scale

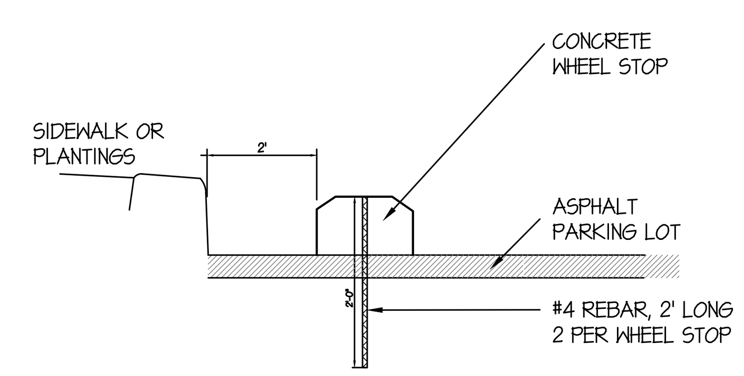

7 C3.4 WHEELSTOP
no scale

8 C3.4 NOT USED
no scale

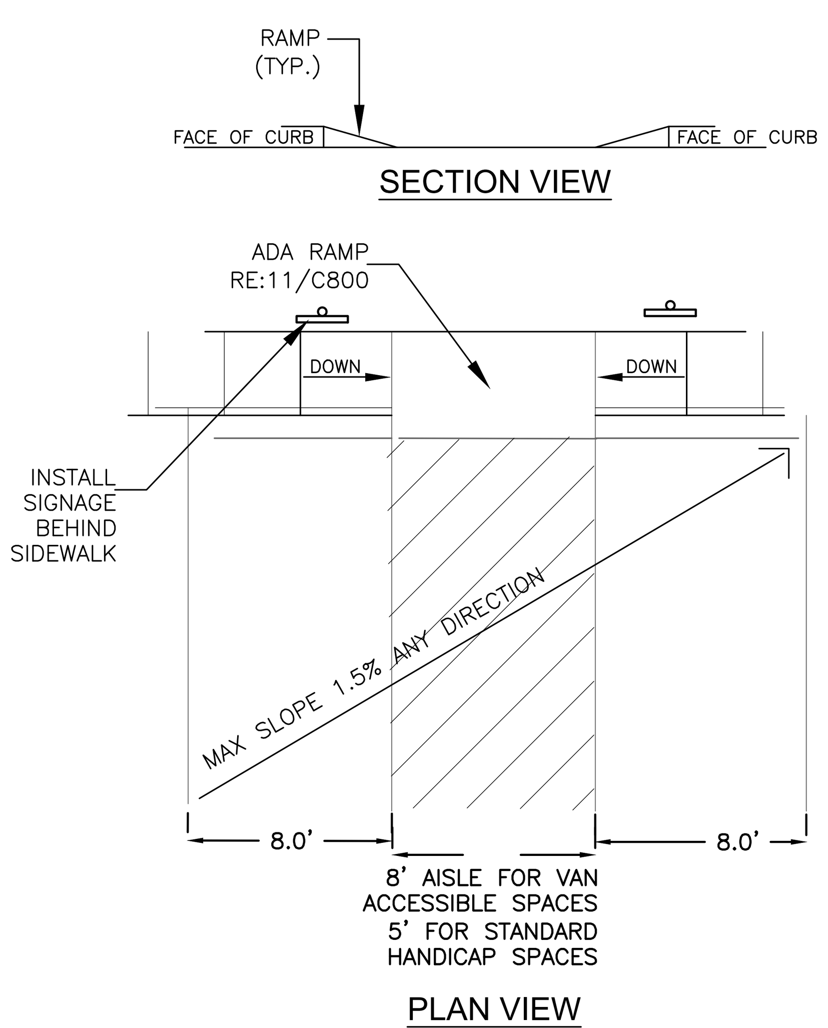

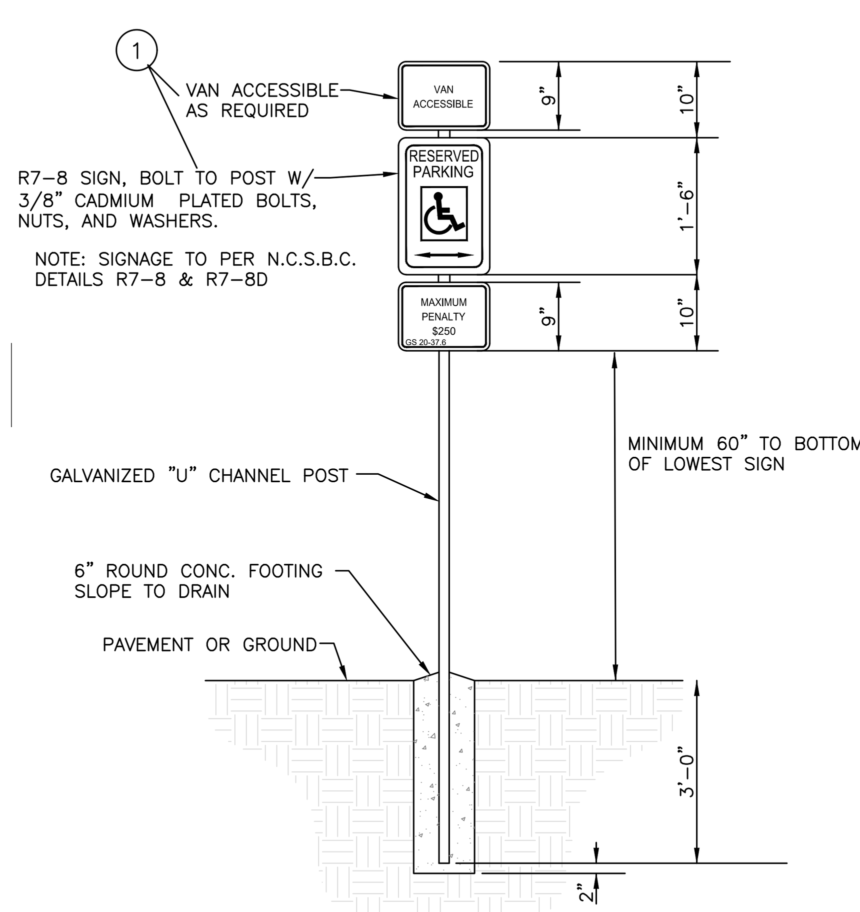

GENERAL NOTES:
1. REGARDLESS OF AGE, ALL ACCESSIBLE SPACES SHALL BE IDENTIFIED BY ABOVE–GROUND SIGNS ONLY.
2. NEW SPACES SHALL NOT USE GROUND–PAINTED SYMBOLS.
3. ACCESSIBLE SPACES ARE REQUIRED TO BE STRIPED OFF ONLY; BLUE COLORING IS NOT NECESSARY NOR REQUIRED.
4. STRIPING IS WHITE ON DARK PAVEMENT; BLACK ON LIGHT PAVEMENT. (N.C.D.O.T.)

9 C3.4 ADA PARKING
no scale

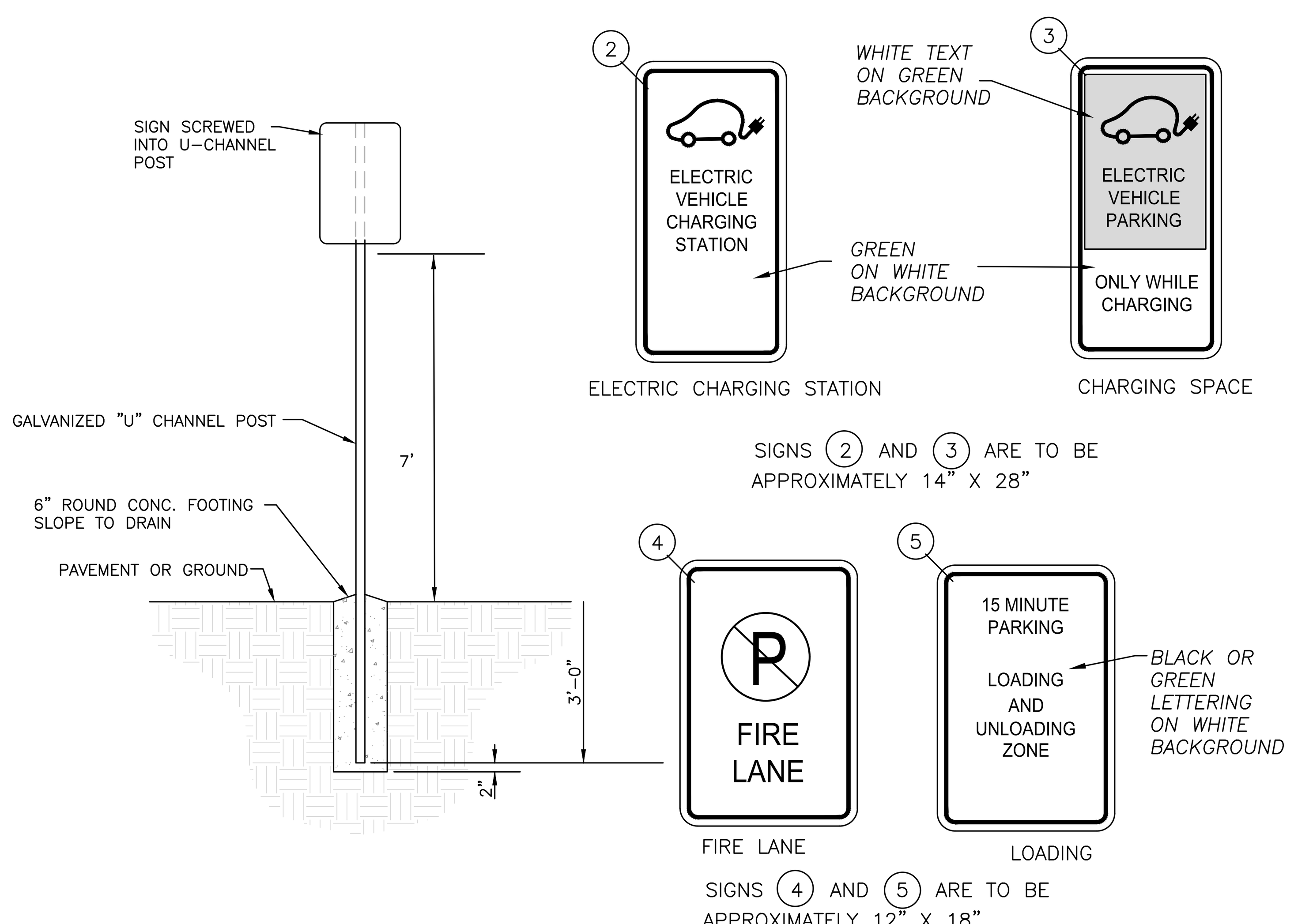

10 C3.4 PARKING AREA SIGNAGE
no scale

11 C3.4 NOT USED
no scale

PRELIMINARY NOT FOR CONSTRUCTION

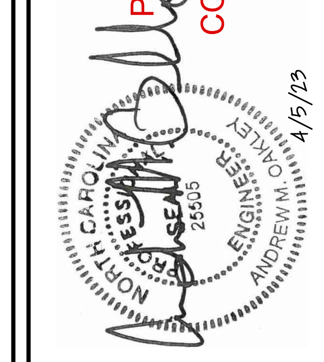

NO.	REVISIONS	BY	DATE
1	TOWN COMMENTS	T&H	4/5/23

THOMAS & HUTTON
111 West Main Street
Durham, NC 27701 • 919.682.0368
www.thomasandhutton.com

EB CAPITAL PARTNERS
CHAPEL HILL, NC
CHAPEL HILL CROSSING
SITE DETAILS

JOB NO:	J- 30792
DATE:	2/10/23
DRAWN:	WLR, AMO, MTC
DESIGNED:	WLR, AMO
REVIEWED:	WLR, AMO
APPROVED:	
SCALE:	NTS

C3.4

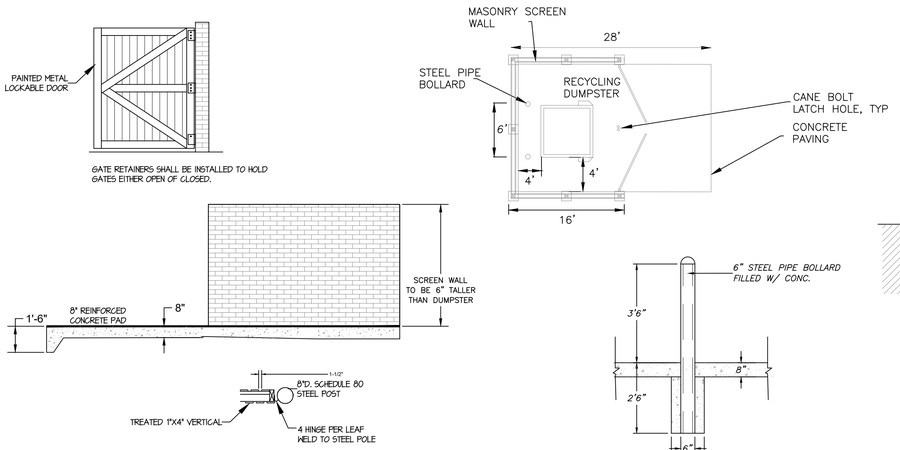

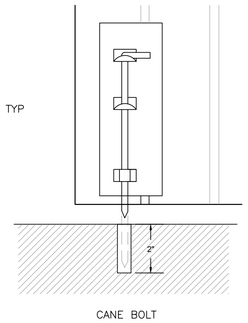

1 / C3.5 RECYCLING DUMPSTER FACILITY

no scale

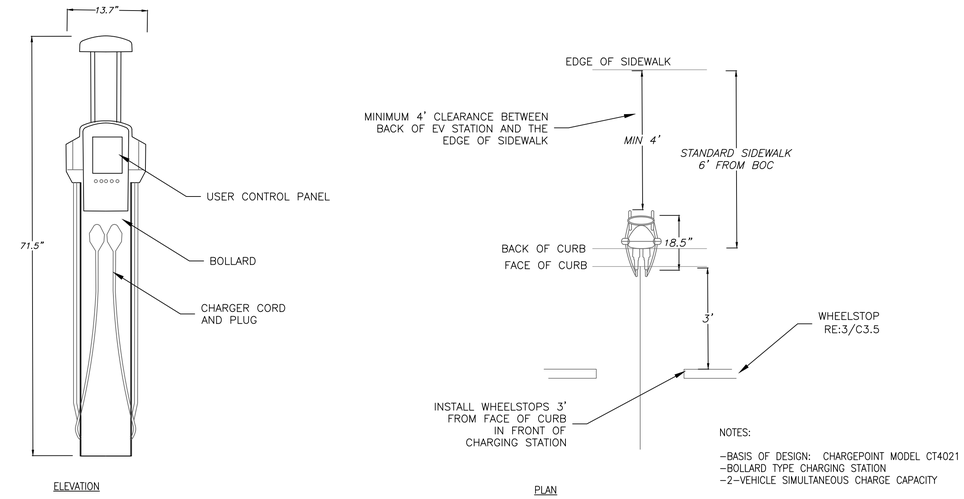

NOTES:

–BASIS OF DESIGN: CHARGEPOINT MODEL CT4021
–BOLLARD TYPE CHARGING STATION
–2–VEHICLE SIMULTANEOUS CHARGE CAPACITY

2 / C3.5 EV CHARGING STATION AND ADJACENT SIDEWALK

no scale

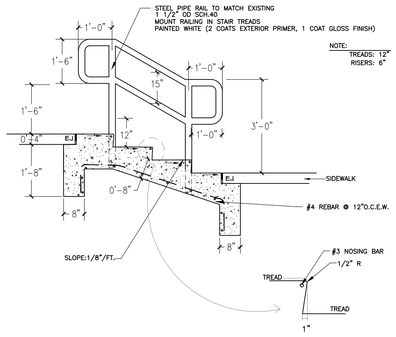

3 / C3.5 EXTERIOR CONCRETE STEPS

no scale

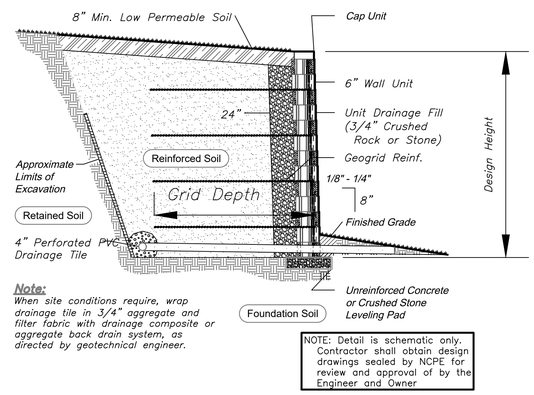

Note:
When site conditions require, wrap drainage tile in 3/4" aggregate and filter fabric with drainage composite or aggregate back drain system, as directed by geotechnical engineer.

4 / C3.5 SEGMENTAL BLOCK WALL CONCEPTUAL DETAIL

no scale

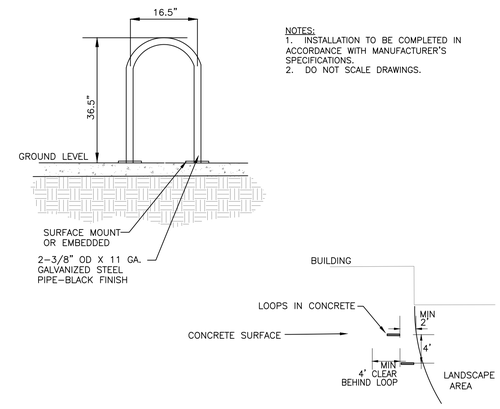

NOTES:
1. INSTALLATION TO BE COMPLETED IN ACCORDANCE WITH MANUFACTURER'S SPECIFICATIONS.
2. DO NOT SCALE DRAWINGS.

5 / C3.5 EXTERIOR BIKE RACKS

no scale

6 / C3.5 NOT USED

no scale

7 / C3.5 NOT USED

no scale

8 / C3.5 NOT USED

no scale

9 / C3.5 NOT USED

no scale

PRELIMINARY NOT FOR CONSTRUCTION
4/5/23

NO.	REVISIONS	BY	DATE
1	TOWN COMMENTS	T&H	4/5/23

THOMAS & HUTTON
111 West Main Street
Durham, NC 27701 • 919.682.0368
www.thomasandhutton.com

EB CAPITAL PARTNERS
CHAPEL HILL, NC
CHAPEL HILL CROSSING
SITE DETAILS

JOB NO:	J- 30792
DATE:	2/10/23
DRAWN:	WLR, AMO, MTC
DESIGNED:	WLR, AMO
REVIEWED:	WLR, AMO
APPROVED:	
SCALE:	NTS

C3.5

1. LANDSCAPING MUST BE IN PLACE PRIOR TO REQUEST FOR A CERTIFICATE OF OCCUPANCY OR CERTIFICATE OF COMPLIANCE.

2. CONTRACTOR SHALL FIELD VERIFY ALL DIMENSIONS, DEPTHS, QUANTITIES, DISTANCES, ANGLES AND SLOPES PRIOR TO ORDERING MATERIALS OR INSTALLING PROJECT.

3. IN AREAS OF GROUND COVER, MAINTAIN A 12" MINIMUM DISTANCE BETWEEN PLANTS AND HARD IMPROVEMENTS.

4. BED LINES SHALL CONFORM TO CONFIGURATION SHOWN ON THE PLANS. BED LINES SHALL MEET CURBS, WALKS, BUILDINGS, ETC. AT RIGHT ANGLES UNLESS SHOWN OTHERWISE.

5. CONTRACTOR SHALL VISIT THE SITE AND FAMILIARIZE THEMSELF WITH ACTUAL CONDITIONS AND VERIFY EXISTING CONDITIONS IN THE FIELD. CONTRACTOR SHALL REPORT ALL DISCREPANCIES TO LANDSCAPE ARCHITECT.

6. CONTRACTOR SHALL ACCEPT ACTUAL CONDITIONS AT SITE AND PERFORM THE WORK SPECIFIED INCLUDING FINE GRADING AND INCORPORATION OF TOP SOIL INTO PLANTING AREAS, WITHOUT ADDITIONAL COMPENSATION FOR POSSIBLE VARIATION FROM GRADES AND CONDITIONS SHOWN, WHETHER SURFACE OR SUBSURFACE, EXCEPT AS PROVIDED FOR IN CONTRACT DOCUMENTS.

7. IN LAWN AREAS, 2" TOPSOIL/COMPOST SHALL BE TILLED INTO THE TOP 5" OF GROUND PRIOR TO SEEDING. IN LANDSCAPE BEDS, 3" TOPSOIL/COMPOST SHALL BE TILLED INTO THE TOP 6" OF GROUND PRIOR TO PLANT INSTALLATION. ALL COMPACTED SOIL IS TO BE LOOSENED TO A DEPTH OF 12".

8. CONTRACTOR WILL OBTAIN WRITTEN APPROVAL FROM LANDSCAPE ARCHITECT FOR ANY PLANT SUBSTITUTIONS OF SPECIES, SIZE, OR TYPE OF CONTAINER.

9. CONTRACTOR SHALL LOCATE ALL UNDERGROUND UTILITIES PRIOR TO CONSTRUCTION AND SHALL BE RESPONSIBLE FOR THE PROTECTION OF THESE UTILITIES DURING INSTALLATION, AND SHALL PROMPTLY REPAIR AND RESTORE SERVICES AT NO ADDITIONAL COST TO THE OWNER IF DAMAGE OCCURS DURING INSTALLATION. CONTRACTOR SHALL BECOME THOROUGHLY FAMILIAR WITH THE FULL SET OF CONSTRUCTION DRAWINGS AND SPECIFICATIONS FOR COORDINATION WITH UTILITIES, ARCHITECTURAL FEATURES, ETC.

10. CONTRACTOR WILL LEAVE DISTURBED AREAS LEVEL AND RAKED SMOOTH, REMOVING ALL ROCKS AND DEBRIS.

11. MULCH IS TO BE A 3" LAYER OF TRIPLE SHREDDED HARDWOOD MULCH. MULCH IS TO BE KEPT AWAY FROM TREE TRUNKS.

12. ANY DAMAGE TO EXISTING CONDITIONS OUTSIDE THE CONTRACT LIMITS, INCLUDING CURBS, SIDEWALKS, TURF AREAS AND PAVING, SHALL BE RESTORED TO ORIGINAL CONDITION BY THE CONTRACTOR WITHOUT EXTRA COST TO THE OWNER.

13. IN CASE OF DISCREPANCY BETWEEN THE QUANTITY OF PLANTS ON THE PLANS COMPARED TO THE PLANT LIST, THE CONTRACTOR SHALL SUPPLY QUANTITIES AS SHOWN ON THE PLANS.

14. ALL UNPAVED SURFACES ARE TO BE COVERED IN PLANTS, MULCH, OR GRASS.

15. LINE OF SIGHT NOTE: NO PROPOSED LANDSCAPING WITHIN THE LINE OF SIGHT EASEMENT SHALL EXCEED 24" AT MATURITY. ANY NEW TREES SHALL BE LIMBED TO 7' ABOVE FINISHED GRADE.

16. ANY INVASIVE, EXOTIC PLANT MATERIAL WILL BE REMOVED FROM LANDSCAPE BUFFERS. A SURVEY OF EXISTING THE LANDSCAPE BUFFERS TO REMAIN WILL BE CONDUCTED FOLLOWING INITIAL CLEARING, AND ANY INVASIVE OR EXOTIC SPECIES FOUND WILL BE REMOVED.

2 LANDSCAPING NOTES
L1.1

	NORTH	SOUTH
SITE AREA	283,779 SF	426,215 SF
LESS STORM EASEMENTS	14,625 SF	50,700 SF
LESS UTILITY EASEMENTS	0	67,600 SF
NET AREA BASE	269,154 SF	307,915 SF
PERCENT COVERAGE	30%	40%
COVERAGE REQUIRED	80,746 SF	123,166 SF
RETAINED TREE AREA:	87,500 SF	0 SF
PROPOSED TREE	50 trees x 500 sf	250 trees x 500 sf
INSTALLATION:	25,000 SF	125,000 SF
TOTAL TREE COVERAGE:	112,500 SF	125,000 SF

TOTAL TREE COVERAGE REQUIRED: 203,912
TREE AREA RETAINED: 87,500 SF
PROPOSED TREE INSTALLATION 150,000 SF CREDIT

TOTAL PROPOSED TREE COVERAGE: 237,500 SF

3 TREE COVERAGE CALCULATIONS
L1.1

1. PROJECT LANDSCAPE PLAN WILL COMPLY WITH TOWN UPDATED LANDSCAPE STANDARDS EXCEPT FOR . DETAILS FOR AMENDED SOILS AND VOLUME REQUIREMETNS WILL BE INCLUDED IN FINAL PLANS.

2. FINAL PLANS WILL INCLUDE CARE/MAINTENANCE PRACTICES.

3. CONTRACTOR SHALL FIELD VERIFY ALL DIMENSIONS, DEPTHS, QUANTITIES, DISTANCES, ANGLES AND SLOPES PRIOR TO ORDERING MATERIALS OR INSTALLING PROJECT.

4. IN AREAS OF GROUND COVER, MAINTAIN A 12" MINIMUM DISTANCE BETWEEN PLANTS AND HARD IMPROVEMENTS.

5.

4 COMPLIANCE WITH TOWN LANDSCAPE GUIDELINES
L1.1

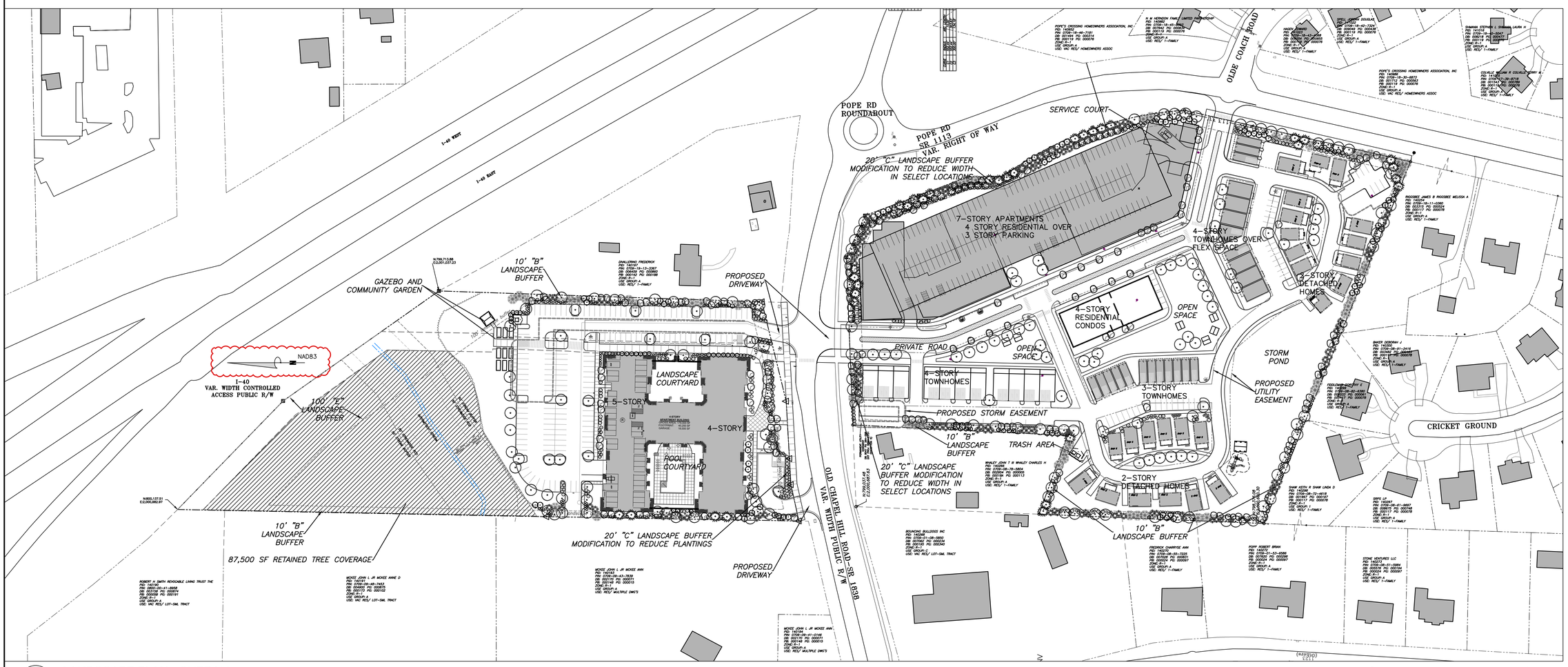

1 LANDSCAPE PLAN - OVERALL
L1.1

SCALE: 1"=80'

PRELIMINARY - NOT FOR CONSTRUCTION

NO.	REVISIONS	BY	DATE
1	TOWN COMMENTS	T&H	4/5/23

THOMAS & HUTTON
111 West Main Street
Durham, NC 27701 • 919.682.0368
www.thomasandhutton.com

EB CAPITAL PARTNERS
CHAPEL HILL, NC

CHAPEL HILL CROSSING

LANDSCAPE PLAN - OVERALL

JOB NO:	J- 30792
DATE:	2/10/23
DRAWN:	WLR, AMO, MTC
DESIGNED:	WLR, AMO
REVIEWED:	WLR, AMO
APPROVED:	
SCALE:	1" = 80'

L1.1

NORTH

	# Required per 100'				Required Plantings:	Plantings Provided
NorthWest Buffer "B" - Adjacent to vacant residential						
Existing forest to remain. No additional plantings proposed.						
10' Wide	4 Large Tree	=	22.0	22	Large Trees	**0 Large Tree**
550 LF	7 Small Tree	=	38.5	39	Small Trees	**0 Small Tree**
(Internal)	12 Shrubs	=	66.0	66	Shrubs	**0 Shrub**
SouthWest Buffer "B" - Adjacent to vacant residential						
10' Wide	4 Large Tree	=	18.3	19	Large Trees	**19 Large Trees**
457 LF	7 Small Tree	=	32.0	32	Small Trees	**32 Small Trees**
(Internal)	12 Shrubs	=	54.9	55	Shrubs	**55 Shrubs**
North Buffer "E" - I-40						
Existing forest to remain. No additional plantings proposed.						
100' Wide	10 Large Tree	=	57.4	58	Large Trees	**0 Large Tree**
574 LF	15 Small Tree	=	86.1	87	Small Trees	**0 Small Tree**
(External)	70 Shrubs	=	401.8	402	Shrubs	**0 Shrub**
East Buffer "B" - Adjacent to residential						
10' Wide	4 Large Tree	=	20.7	21	Large Trees	**21 Large Trees**
516 LF	7 Small Tree	=	36.2	37	Small Trees	**37 Small Trees**
(Internal)	12 Shrubs	=	62.0	62	Shrubs	**62 Shrubs**
South Buffer "C" - Old Chapel Hill Road						
Modification to reduce plant quantity to 30% required plant material						
10' Wide	5 Large Tree	=	18.1	19	Large Trees	**5 Large Trees**
362 LF	10 Small Tree	=	36.2	37	Small Trees	**11 Small Trees**
(External)	36 Shrubs	=	130.4	131	Shrubs	**39 Shrubs**

Parking Lot Shading			1 canopy tree	
Lot	Paved Area		# Required per 2000 Sf	Plantings Provided
North	34,643	SF	17.32	18 **Large Trees**
West	17,145	SF	8.57	9 **Large Trees**
Front	4,346	SF	2.17	3 **Large Trees**

2 L1.2 PLANT CALCULATIONS NORTH

QTY	KEY	BOTANICAL NAME	COMMON NAME	MINIMUM SIZE* CALIPER	HEIGHT	SPACING	REMARKS
TREES							
8	AA	Amerlanchier arborea	Serviceberry		8'-10'	AS SHOWN	FULL AND MATCHING
2	ARC	Acer rubrum 'Columnare'	Columnar Red Maple	3"-3.5"		AS SHOWN	FULL AND MATCHING
9	ASL	Acer saccharum 'Legacy'	Legacy Sugar Maple	3"-3.5"		AS SHOWN	FULL AND MATCHING
7	BN	Betula nigra	River Birch	3"-3.5"	10'	AS SHOWN	MULTI-STEM
20	CC	Cercis canadensis	Redbud		8'-10'	AS SHOWN	FULL
7	CF	Cornus florida	Flowering Dogwood		8'-10'	AS SHOWN	FULL
7	INS	Ilex Nellie Stevens	Nellie Stevens Holly		8'-10'	AS SHOWN	FULL
7	IO	Ilex opaca	American Holly		8'-10'	AS SHOWN	FULL AND MATCHING
3	IV	Ilex verticillata	Winterberry		6'	AS SHOWN	FULL
9	LT	Liriodendron tulipifera	Tulip Poplar	3"-3.5"		AS SHOWN	FULL
2	MG	Magnolia grandiflora	Southern Magnolia	3"-3.5"			
10	MLG	Magnolia 'Little Gem'	Little Gem Magnolia		8'-10'	AS SHOWN	FULL AND MATCHING
15	MC	Myrica cerifera	Southern waxmyrtle		5'	AS SHOWN	FULL AND MATCHING
10	NS	Nyssa sylvatica	Blackgum	3"-3.5"		AS SHOWN	FULL
9	OF	Osmanthus fortunei	Fragrant Osmanthus		6'	AS SHOWN	FULL
4	OA	Oxydendron arborea	Sourwood		8'	AS SHOWN	
7	PRC	Prunus caroliniana 'Morus'	Bright n Tight Carolina Laurel		8'	AS SHOWN	FULL AND MATCHING
8	PV	Pinus virginiana	Virginia Pine	3"-3.5"	10'-12'	AS SHOWN	FULL
1	QP	Quercus phellos	Willow Oak	3"-3.5"		AS SHOWN	FULL
9	QS	Quercus shumardii	Shyumard Oak	3"-3.5"		AS SHOWN	FULL
10	UP	Ulmus americana 'Princeton'	Princeton Elm	3"-3.5"		AS SHOWN	FULL
164 trees total							
SHRUBS							
		Azalea 'Autumn Twist'	Autumn Twist Encore Azalea		24"	AS SHOWN	FULL AND MATCHING
		Callicarpa americana	American Beautyberry		24"	AS SHOWN	FULL AND MATCHING
		Distyllium 'Emerald Heights'	Emerald Heights Distyllium		24"	AS SHOWN	FULL AND MATCHING
		Cornus alba 'Sibirica'	Red Twig Dogwood		30"	AS SHOWN	FULL AND MATCHING
		Euonymus fortunei 'Emerald Gaity'	Emerald Gaity Euonymus		24"	AS SHOWN	FULL AND MATCHING
		Fothergilla 'Mt Airy'	Mt Airy Fothergilla		30"	AS SHOWN	FULL AND MATCHING
		Gardenia jasminoides 'August Beauty'	August Beauty Gardenia		30"	AS SHOWN	FULL AND MATCHING
		Gardenia jasminoides 'Kleims Hardy'	Kleims Hardy Gardenia		24"	AS SHOWN	FULL AND MATCHING
		Hydrangea quercifolia	Oakleaf Hydrangea		36"	AS SHOWN	FULL AND MATCHING
		Ilex glabra	Inkberry Holly		30"	AS SHOWN	FULL AND MATCHING
		Illicium floridanum	Florida Anise		30"		FULL AND MATCHING
		Sarcococca ruscifolia	Sweetbox		24"	5' O.C.	FULL AND MATCHING
		Viburnum dentatum	Arrowwood Viburnum		36"	6' O.C.	FULL AND MATCHING
		Viburnum juddei	Judd Viburnum		26"	5' O.C.	FULL AND MATCHING
157	shrubs total						
GROUNDCOVER/GRASSES							
		Panicum virginiana	Switchgrass	1 GAL		3' O.C.	FULL AND MATCHING
		Pennisetum alopecuroides	Pennisetum	1 GAL		3' O.C.	FULL AND MATCHING

3 L1.2 PLANT LIST - NORTH
PLANT LIST MAY BE EXPANDED AT FINAL PLAN PHASE

QTY	KEY	BOTANICAL NAME	COMMON NAME	MINIMUM SIZE* CALIPER	HEIGHT	SPACING	REMARKS
TREES							
23	AA	Amerlanchier arborea	Serviceberry		8'	AS SHOWN	FULL AND MATCHING
3	ARC	Acer rubrum 'Columnare'	Columnar Red Maple	3"-3.5"		AS SHOWN	FULL AND MATCHING
12	ASL	Acer saccharum 'Legacy'	Legacy Sugar Maple	3"-3.5"		AS SHOWN	FULL AND MATCHING
6	BN	Betula nigra	River Birch	3"-3.5"		AS SHOWN	MULTI-STEM
20	CC	Cercis canadensis	Redbud		8'	AS SHOWN	FULL
23	CF	Cornus florida	Flowering Dogwood		8'-10'	AS SHOWN	FULL
20	CV	Chionanthus virginicus	Fringetree		8'-10'	AS SHOWN	FULL AND MATCHING
20	INS	Ilex Nellie Stevens	Nellie Stevens Holly		8'-10'	AS SHOWN	FULL
31	IO	Ilex opaca	American Holly	3"-3.5"	10'-12'	AS SHOWN	FULL AND MATCHING
9	IV	Ilex verticillata	Winterberry		6'	AS SHOWN	FULL
9	LT	Liriodendron tulipifera	Tulip Poplar	3"-3.5"		AS SHOWN	FULL
		Magnolia grandiflora	Southern Magnolia	3"-3.5"	10'-12'		
30	MLG	Magnolia 'Little Gem'	Little Gem Magnolia		8'-10'	AS SHOWN	FULL AND MATCHING
20	MC	Myrica cerifera	Southern waxmyrtle		5'	AS SHOWN	FULL AND MATCHING
7	NS	Nyssa sylvatica	Blackgum	3"-3.5"		AS SHOWN	FULL
43	OF	Osmanthus fortunei	Fragrant Osmanthus		6'	AS SHOWN	FULL
22	PRC	Prunus caroliniana 'Morus'	Bright n Tight Carolina Laurel		8'	AS SHOWN	FULL AND MATCHING
35	PV	Pinus virginiana	Virginia Pine	3"-3.5"	10'-12'	AS SHOWN	FULL
5	QP	Quercus phellos	Willow Oak	3"-3.5"		AS SHOWN	FULL
6	QS	Quercus shumardii	Shyumard Oak	3"-3.5"		AS SHOWN	FULL
13	UP	Ulmus americana 'Princeton'	Princeton Elm	3"-3.5"		AS SHOWN	FULL
357 trees total							
SHRUBS							
		Azalea 'Autumn Twist'	Autumn Twist Encore Azalea		24"	AS SHOWN	FULL AND MATCHING
		Callicarpa americana	American Beautyberry		24"	AS SHOWN	FULL AND MATCHING
		Distyllium 'Emerald Heights'	Emerald Heights Distyllium		24"	AS SHOWN	FULL AND MATCHING
		Cornus alba 'Sibirica'	Red Twig Dogwood		30"	AS SHOWN	FULL AND MATCHING
		Euonymus fortunei 'Emerald Gaity'	Emerald Gaity Euonymus		24"	AS SHOWN	FULL AND MATCHING
		Fothergilla 'Mt Airy'	Mt Airy Fothergilla		30"	AS SHOWN	FULL AND MATCHING
		Gardenia jasminoides 'August Beauty'	August Beauty Gardenia		30"	AS SHOWN	FULL AND MATCHING
		Gardenia jasminoides 'Kleims Hardy'	Kleims Hardy Gardenia		24"	AS SHOWN	FULL AND MATCHING
		Hydrangea quercifolia	Oakleaf Hydrangea		36"	AS SHOWN	FULL AND MATCHING
		Ilex glabra	Inkberry Holly		30"	AS SHOWN	FULL AND MATCHING
		Illicium floridanum	Florida Anise		30"		FULL AND MATCHING
		Sarcococca ruscifolia	Sweetbox		24"	5' O.C.	FULL AND MATCHING
		Viburnum dentatum	Arrowwood Viburnum		36"	6' O.C.	FULL AND MATCHING
		Viburnum juddei	Judd Viburnum		36"	5' O.C.	FULL AND MATCHING
640	shrubs total						
GROUNDCOVER/GRASSES							
		Panicum virginiana	Switchgrass	1 GAL		3' O.C.	FULL AND MATCHING
		Pennisetum alopecuroides	Pennisetum	1 GAL		3' O.C.	FULL AND MATCHING

3 L1.2 PLANT LIST - SOUTH (shown on sheet L-1.4)
PLANT LIST MAY BE EXPANDED AT FINAL PLAN PHASE

LEGEND

Canopy Tree

Understory Tree

Shrub

NOTE: SHRUBS ARE SHOWN ON THE PLAN AND QUANTITIES INDICATED ON THE PLANT LIST.

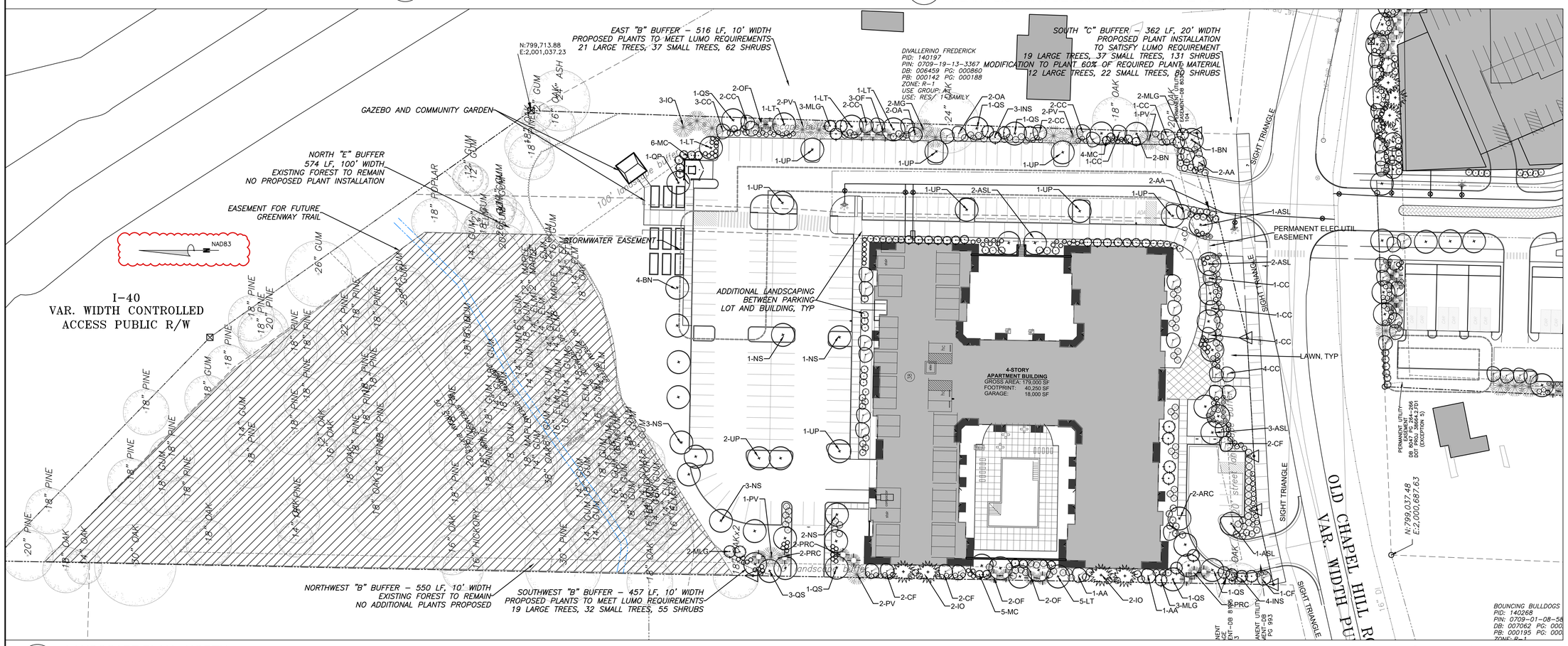

1 L1.2 LANDSCAPE PLAN - NORTH
SCALE: 1"=40'

PRELIMINARY - NOT FOR CONSTRUCTION

NO.	TOWN COMMENTS	BY	DATE
1	REVISIONS	T&H	4/5/23

THOMAS & HUTTON
111 West Main Street
Durham, NC 27701 • 919.682.0368
www.thomasandhutton.com

EB CAPITAL PARTNERS
CHAPEL HILL, NC
CHAPEL HILL CROSSING
LANDSCAPE PLAN - NORTH

JOB NO:	J- 30792
DATE:	2/10/23
DRAWN:	WLR, AMO, MTC
DESIGNED:	WLR, AMO
REVIEWED:	WLR, AMO
APPROVED:	
SCALE:	1" = 40'

L1.2

SOUTH

	# Required per 100'			Required Plantings:		Plantings Provided	
North Buffer "C" - Old Chapel Hill Road							
20' Wide	5	Large Tree	= 17.3	18	Large Trees	**18**	**Large Trees**
346 LF	10	Small Tree	= 34.6	35	Small Trees	**35**	**Small Trees**
(Internal)	36	Shrubs	= 124.6	125	Shrubs	**125**	**Shrubs**
East Buffer "C" - Pope Road							
20' Wide	5	Large Tree	= 46.4	47	Large Trees	**47**	**Large Trees**
928 LF	10	Small Tree	= 92.8	93	Small Trees	**93**	**Small Trees**
(Internal)	36	Shrubs	= 334.1	335	Shrubs	**335**	**Shrubs**
South Buffer "B" - Adjacent to residential							
10' Wide	4	Large Tree	= 25.4	26	Large Trees	**26**	**Large Trees**
633 LF	7	Small Tree	= 44.4	45	Small Trees	**45**	**Small Trees**
(External)	12	Shrubs	= 76.0	76	Shrubs	**76**	**Shrubs**
SouthWest Buffer "B" - Adjacent to residential							
10' Wide	4	Large Tree	= 10.5	11	Large Trees	**11**	**Large Trees**
261 LF	7	Small Tree	= 18.3	19	Small Trees	**19**	**Small Trees**
(Internal)	12	Shrubs	= 31.4	32	Shrubs	**32**	**Shrubs**
MidWest Buffer "B" - Adjacent to recreation business							
10' Wide	4	Large Tree	= 4.2	5	Large Trees	**5**	**Large Trees**
105 LF	7	Small Tree	= 7.4	8	Small Trees	**8**	**Small Trees**
(Internal)	12	Shrubs	= 12.6	13	Shrubs	**13**	**Shrubs**
NorthWest Buffer "B" - Adjacent to residential							
10' Wide	4	Large Tree	= 19.4	20	Large Trees	**20**	**Large Trees**
484 LF	7	Small Tree	= 33.9	34	Small Trees	**34**	**Small Trees**
(External)	12	Shrubs	= 58.1	59	Shrubs	**59**	**Shrubs**

Parking Lot Shading		1 canopy tree	
Lot	Paved Area	# Required per 2000 Sf	Plantings Provided
Townhome	6,050 SF	3.03	4 **Large Trees**
Bulldog Lot	7,365 SF	3.68	4 **Large Trees**
Pope Lot	6,680 SF	3.34	4 **Large Trees**
Pope Corner	2,765 SF	1.38	2 **Large Trees**

2 L1.3 PLANT CALCULATIONS - SOUTH

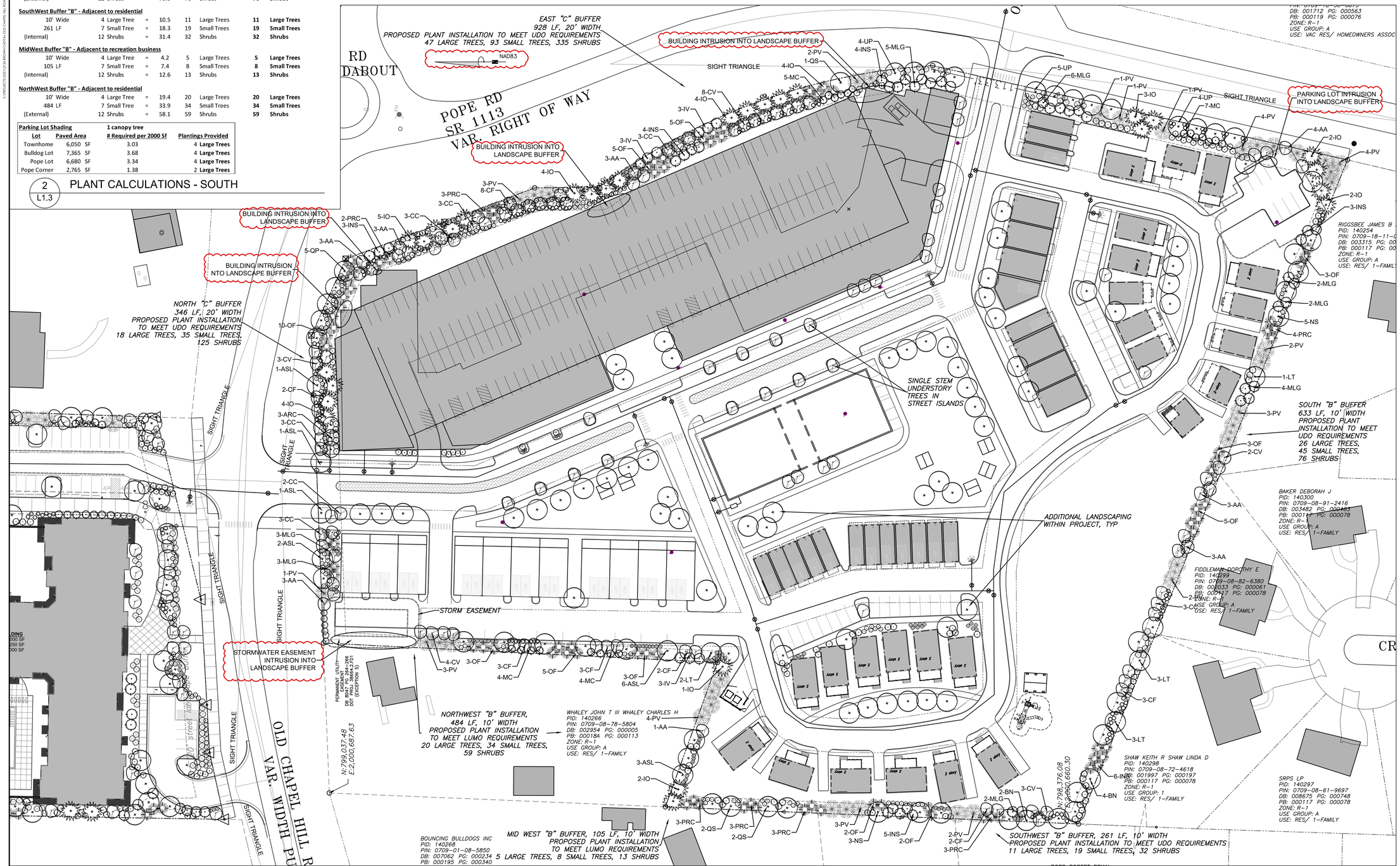

1 L1.3 LANDSCAPE PLAN - SOUTH

SCALE: 1"=40'

PRELIMINARY - NOT FOR CONSTRUCTION

NO.	TOWN COMMENTS	BY	DATE
1	REVISIONS	T&H	4/5/23

THOMAS & HUTTON
111 West Main Street
Durham, NC 27701 • 919.682.0368
www.thomasandhutton.com

EB CAPITAL PARTNERS
CHAPEL HILL, NC

CHAPEL HILL CROSSING

LANDSCAPE PLAN - SOUTH

JOB NO:	J- 30792
DATE:	2/10/23
DRAWN:	WLR, AMO, MTC
DESIGNED:	WLR, AMO
REVIEWED:	WLR, AMO
APPROVED:	
SCALE:	1" = 40'

L1.3

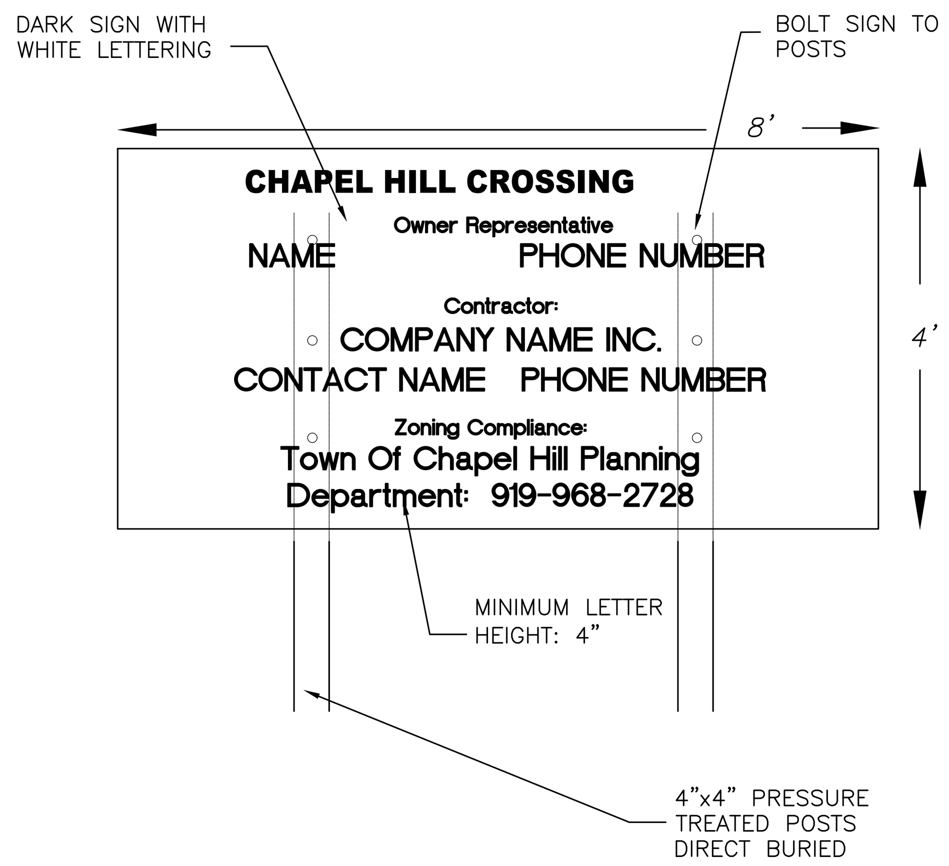

NOTES:
1. AT A MINIMUM, THE SIGN IS TO INCLUDE THE FOLLOWING INFORMATION: PROJECT NAME, OWNER CONTACT, CONTRACTOR CONTACT, ZONING COMPLIANCE CONTACT.
2. SIGN IS TO BE A MAXIMUM OF 4' X 8'
3. SIGN IS TO BE REMOVED AT PROJECT COMPLETION
4. THE SIGN WILL NEED A SEPARATE PERMIT THROUGH TOWN OF CHAPEL HILL PLANNING DEPARTMENT

2 (M1.1) CONSTRUCTION SIGNAGE DETAIL

1. *ALL CONSTRUCTION TRAFFIC AND PARKING IS CONFINED TO THE PROJECT SITE.*
2. *NO CONSTRUCTION PARKING WILL BE ALLOWED ON ADJACENT RESIDENTIAL STREETS.*
3. *HOURS OF CONSTRUCTION ARE MONDAY TO FRIDAY 7 AM TO 6 PM, AND SATURDAY AS NEEDED BETWEEN 8 AM AND 6 PM. THERE WILL BE NO CONSTRUCTION ON SUNDAYS.*
   THE TOWN OF CHAPEL HILL NOISE ORDINANCE MUST BE COMPLIED WITH. THE TOWN ORDINANCE SPECIFIES CONSTRUCTION OPERATIONS ARE LIMITED TO 7 AM TO 9 PM WEEKDAYS, AND 8 AM TO 9 PM WEEKENDS.
   ANY ROCK REMOVAL WORK NEEDS TO BE COORDINATED WITH TOWN ADMINISTRATION, AND NEIGHBORS NOTIFIED IN ADVANCE.
4. *PROVIDE PAVED ON-SITE PARKING FOR INSPECTORS AT EACH UNDER-CONSTRUCTION BUILDING FOR THE DURATION OF THE CONSTRUCTION PROJECT.*
5. *ALL MATERIAL STORAGE AND CONSTRUCTION PARKING IS TO OCCUR IN THE FOOTPRINTS OF PROPOSED PARKING AND BUILDING AREAS AND IS NOT TO EXTEND BEYOND SHOWN AND APPROVED LIMITS OF DISTURBANCE OR INTO ANY RIGHT OF WAY.*

3 (M1.1) CONSTRUCTION STAGING NOTES

1. *CONTRACTOR SHALL MAINTAIN A FIRE WATCH DURING THE CONSTRUCTION OR DEMOLITION OF "HOT WORK" THAT MAY SUBJECT MATERIALS TO SPONTANEOUS COMBUSTION. THE FIRE WATCH SHALL CONSIST OF AT LEAST ONE PERSON WITH A MEANS OF COMMUNICATING AN ALARM TO 911, SHALL HAVE A WRITTEN ADDRESS POSTED IN A CONSPICUOUS LOCATION, AND SHALL MAINTAIN CONSTANT PATROLS.*
2. *ALL CONSTRUCTION AND DEMOLITION SHALL COMPLY WITH THE CURRENT EDITION OF CHAPTER 14 OF THE NC FPC (FIRE CODE).*
3. *ANY TEMPORARY FENCING OF CONSTRUCTION AREAS MUST INCLUDE GATES SIZED FOR FIRE / EMERGENCY ACCESS. ANY PERMANENT OR TEMPORARY GATES ACROSS FIRE ACCESS DRIVES SHALL BE A MINIMUM WIDTH OF 20', EITHER SWINGING OR SLIDING TYPE, HAVE AN EMERGENCY MEANS OF OPERATION, AND SHALL BE OPERABLE BY EITHER FORCIBLE ENTRY OR KEYED, CAPABLE OF BEING OPERATED BY ONE PERSON, AND SHALL BE INSTALLED AND MAINTAINED ACCORDING TO UL 325 AND ASTM F 2200 NC FPC 2012.*

4 (M1.1) FIRE PROTECTION NOTES

1. SIGNS SHOWN ON THIS PLAN ARE REQUIRED DURING THE CONSTRUCTION OF THIS PROJECT.
2. CONSTRUCTION REQUIRING TEMPORARY LANE CLOSURES ON PUBLIC STREETS NEEDS TOWN APPROVAL. TEMPORARY LANE ~~CLOSURES ARE ONLY ALLOWED DURING DAYLIGHT HOURS.~~
3. CONTRACTOR MUST CONTACT CHAPEL HILL TRANSIT AT LEAST 5 BUSINESS DAYS PRIOR TO ANY CONSTRUCTION REQUIRING ANY LANE CLOSURES WHICH MIGHT AFFECT BUS ROUTES.
4. ALL WORK ZONE SIGNAGE SHALL COMPLY WITH APPLICABLE M.U.T.C.D. STANDARDS AND DETAILS.
5. PRIOR TO ANY TRAFFIC LANE CLOSURES, IT WILL BE NECESSARY TO CONTACT TOWN OF CHAPEL HILL ENGINEERING DIVISION AT 919-968-2833, AT LEAST 5 WORKING DAYS BEFORE THE PROPOSED WORK TO APPLY FOR A LANE CLOSURE PERMIT.
6. SIGNS AND TEMPORARY BARRICADES AS NEEDED WILL BE PLACED TO DIRECT PEDESTRIANS WHEN SIDEWALKS ARE IN THE CONSTRUCTION AREAS.

5 (M1.1) TRAFFIC / PEDESTRIAN CONTROL NOTES

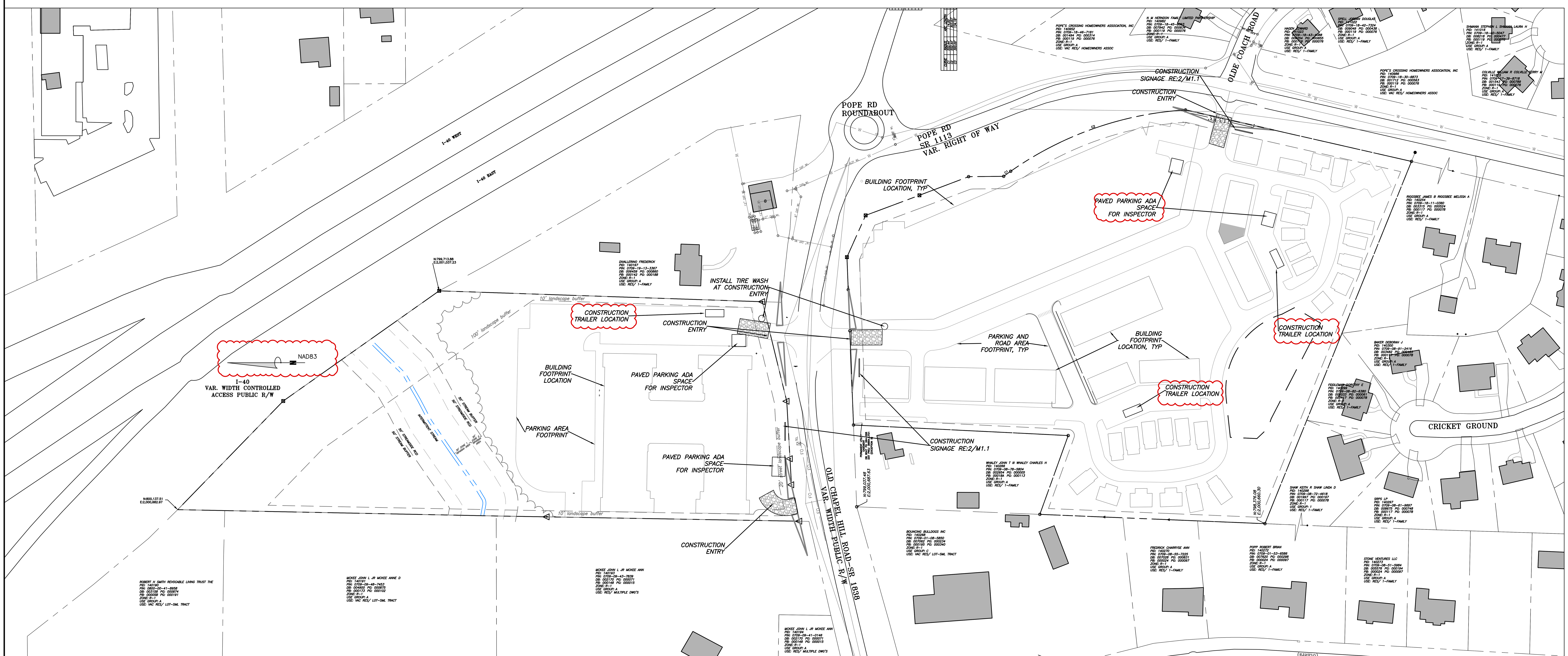

1 (M1.1) CONSTRUCTION MANAGEMENT PLAN

SCALE: 1" = 80'

80' 0 80' 160' 240'

Scale 1" = 80'

PRELIMINARY
NOT FOR CONSTRUCTION
4/5/23

NO.	REVISIONS	BY	DATE
1	TOWN COMMENTS	T&H	4/5/23

THOMAS & HUTTON
111 West Main Street
Durham, NC 27701 • 919.682.0368
www.thomasandhutton.com

EB CAPITAL PARTNERS
CHAPEL HILL, NC

CHAPEL HILL CROSSING

CONSTRUCTION MANAGEMENT PLAN

JOB NO:	J- 30792
DATE:	2/10/23
DRAWN:	WLR, AMO, MTC
DESIGNED:	WLR, AMO
REVIEWED:	WLR, AMO
APPROVED:	
SCALE:	1" = 80'

M1.1