Town of Chapel Hill, NC

August 18, 2025

HDC-25-17

Historic District Certificate of Appropriateness

Status: Active

Submitted On: 8/15/2025

Primary Location

702 GIMGHOUL RD
CHAPEL HILL, NC 27514

Owner

THOMAS PHYLLIS TRUSTEE
105 SOUTH DUNTON AVE
ARLINGTON HTS, NC
60005

Applicant

Kaylan Watson
919-833-9096
permitting@ncsolarnow.com
2509 Atlantic Ave
Raleigh, NC 27604

Certificate of Appropriateness Form

Historic District *

Gimghoul

Application Type

Check all that apply

Minor Work is exterior work that doesn't involve any substantial alterations, additions, or removals that could impair the integrity of the property and/or the district as a whole. See Chapel Hill Historic Districts Design Principles & Standards (“Principles & Standards”) (p. 9-11) for a list of minor works.

Major Work (Historic District Commission Review) includes all exterior changes to structures and features other than minor works.

Contact HDC Staff Liaison(s) if you're unsure of the application type.

Maintenance or Repair Work

☐

Minor Work (Staff Review)

☐

Major Work (Historic District Commission Review)

☑

COA Amendment

☐

Briefly describe the proposed changes. *

Installation of roof-mounted PV Array via DOI/OPT 2 and installation of (2) Tesla Powerwall 3.

Is this application for after-the-fact work?*

No

Is this applicaiton a request for review after a previous denial?*

No

Applicant Authorization

Applicant Signature*

Kaylan Watson
Aug 15, 2025

Relationship to Property Owner*

Other

If other, please explain relationship to property owner. *

Applicant

TOWN OF CHAPEL HILL
Planning Department
405 Martin Luther King Jr. Blvd.
Chapel Hill, NC 27514-5705

phone (919) 968-2728
email planning@townofchapelhill.org
www.townofchapelhill.org

Property Owner Authorization for Historic District Certificate of Appropriateness (COA)

The current property owner must complete and sign this authorization form if someone else applies for a Certificate of Appropriateness on their behalf. Please submit a separate form per property owner.

Project Name	Thomas_PV+Battery		
Property Address	702 Gimghoul Road, Chapel Hill, NC 27514		
Parcel Identifier Number(s) (PINs)	9788766822		
Property Owner Name (must match County tax records)	Phyllis Thomas		
Property Owner Address	702 Gimghoul Road, Chapel Hill, NC 27514		
Property Owner Email	alan@alanscurtis.com	**Property Owner Phone**	312-218-4176
Relationship to Applicant			

If the property owner is an entity, provide detailed information regarding the principals of the entity.

Property Owner Acknowledgement

As the property owner, you may represent yourself or be represented by attorney; however, professionals such as architects, engineers, designers, and others may provide factual evidence and expert opinions so far as they are qualified, but not legal arguments on behalf of the property owner.

Property Owner Authorization Statement

The undersigned property owner hereby authorizes the application for Conditional Zoning District and certifies that, to the best of the owner's knowledge and belief, all information supplied with this application is true and accurate.

Signature	Phyllis Thomas Digitally signed by Phyllis Thomas Date: 2025.08.15 13:07:37 -04'00'	**Date**	08/15/2025
Print Name	Phyllis Thomas		

Morning Kaylan,

Thank you for submitting the COA application quickly.

- Can you provide historical information on the property? Is this property on the national register? Is the building where the solar panels are located a contributing or a non-contributing structure?

- Can you provide photos of the building where the solar panels will be located? The photos should show each side of the building and the building from the street. You'll want to show if the structure will be visible from the street.

- You'll need to identify and explain how the applicable design standards apply to this project. See 3.1.7 and 3.9.8.

3.1.7. When possible, locate new roof features and mechanical equipment—including, but not limited to dormers, chimneys, skylights, vents, plumbing stacks, solar collectors, and satellite dishes—on roof slopes where they are not visible from the street or in locations where they will not compromise this historic roof design, damage character-defining features or materials, or otherwise compromise the architectural integrity of the building.

3.9.8. Locate low-profile solar panels on side or rear elevations, when possible, or on low-sloped roofs where they are minimally visible from the street. (a.) Solar panels should be flush-mounted—installed parallel with and close to the surface of the roof to which they are attached—in order to minimize their visual impact. (b.) Solar panels should match the color of the existing roof material as much as possible, in order to visually blend with the roof. (c.) Solar panels should be set back from the edges of the roof to minimize their visibility. (d.) Solar panels should not extend above the roof ridges or otherwise alter the roof form of the building. e. No associated pipes or cables should be visible from the street.

- The application fee is $455. I'll activate the payment step, so you can make the payment.

Can you provide the requested information by the end of the week?

Thank you,

Charnika

NCSOLARNOW

August 18, 2025

Morning Charnika,

Thank you for reviewing the information and the COA application. I've provided details below to address your questions:

* The property is not on the national register, and the building where the solar panels will be installed is a non-contributing structure.

* Section 3.17 should not be an issue for the installation as no panels will be placed on the home's roof. Instead, they will be on a detached structure in the rear, which has side-facing roofs not visible from the street. The design ensures compliance with Section 3.9.8, as all panels will be flush-mounted, match the existing roof color, and will not extend beyond the edges and ridges of the roof. Additionally, no conduit or wiring will be visible from the street.

Sincerely,

JR Flanagan

Permitting Coordinator

j.flanagan@ncsolarnow.com | www.ncsolarnow.com








MITSUBISHI ELECTRIC
R410A


MITSUBISHI
ELECTRIC
mr.SLIM
R410A

© 2025 NC SOLAR NOW EXPRESSLY RESERVES ITS COMMON LAW COPYRIGHT AND OTHER PROPERTY RIGHTS IN THESE PLANS. THESE PLANS ARE NOT TO BE REPRODUCED, CHANGED OR COPIED IN ANY FORM OR MANNER WHATSOEVER, NOR ARE THEY TO BE ASSIGNED TO ANY THIRD PARTY WITHOUT FIRST OBTAINING THE EXPRESSED WRITTEN PERMISSION AND CONSENT OF NC SOLAR NOW.

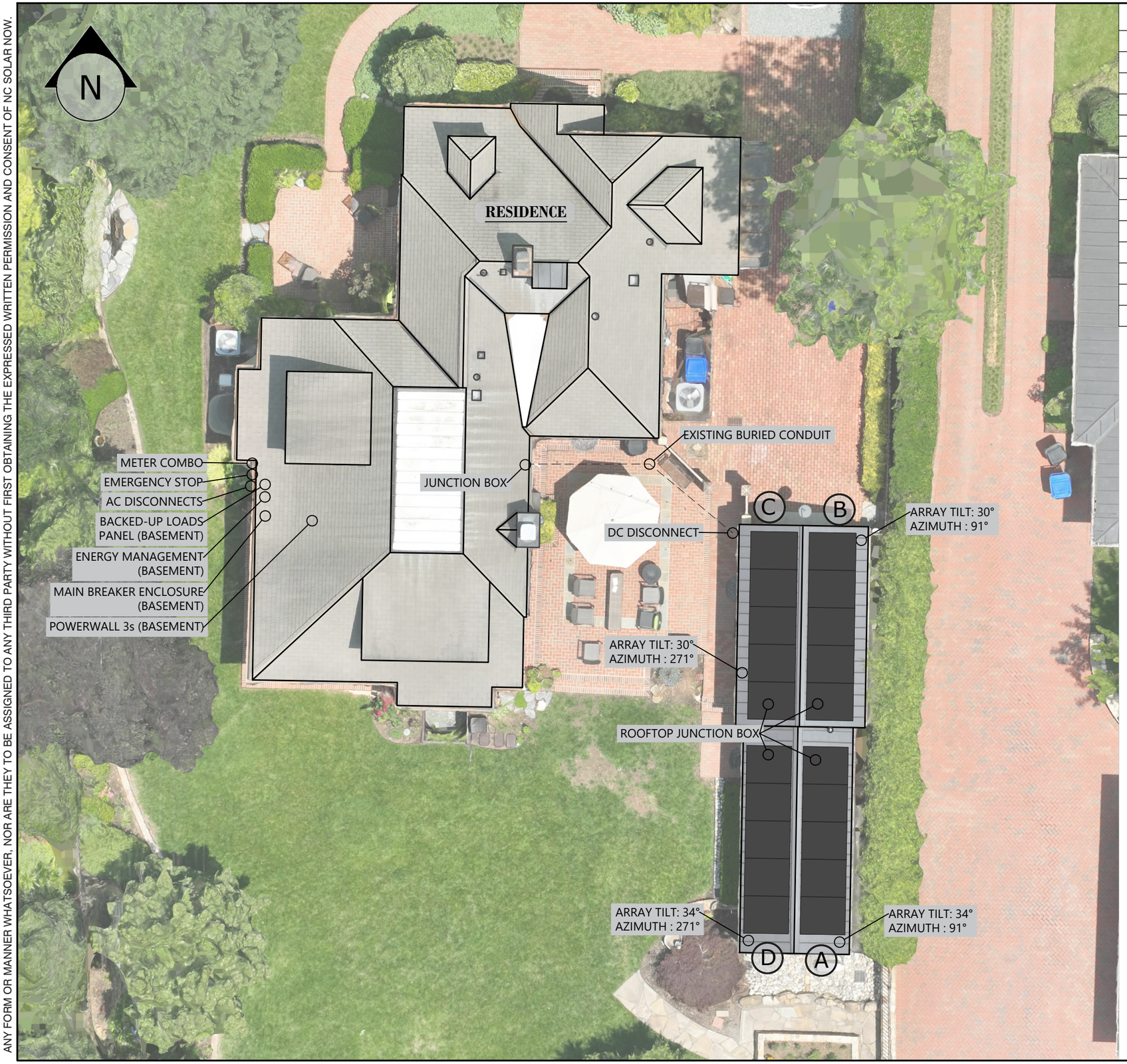

PV MATERIAL SUMMARY: DISTRIBUTOR

REC460AA PURE-RX	20
MCI-2	12
Tesla PW3 1707000-xx-y	2
Tesla GW3 1841000-01-y	1
2065063-00-X	1
XR-10-168B	12
XR10-BOSS-01-M1	8
UFO-CL-01-B1	32
UFO-END-01-B1	16
XR-LUG-03-A1	4
S-5-S	180
LFT-03-M1	180
SOLADECK 0399	4
IMO SI32-PEL64R-8 DC DISCONNECT	1

NC SOLAR NOW

CLIENT INFO

PHYLLIS THOMAS
702 GIMGHOUL ROAD
CHAPEL HILL, NC 27514

PROJECT INFO

DC INPUT:	9.200 kW
AC OUTPUT:	23.000 kW
DOI INSPT. METHOD:	OPTION 2

Model Energy
300 Fayetteville St.
#1430
Raleigh, NC 27602
919-274-9905
ModelEnergy.com
P-1194

NORTH CAROLINA PROFESSIONAL SEAL 035699 ENGINEER ANDREW W. KING 08-08-2025

CODE REFERENCES

NATIONAL ELECTRICAL CODE v. 2017
NC FIRE PROTECTION CODE v. 2018
NC BUILDING CODE v. 2018
NC RESIDENTIAL CODE v. 2018
ACSE v. 7-10

SITE CONDITIONS

WIND SPEED:	120 MPH
RISK CATEGORY:	II
EXPOSURE:	B
SNOW:	15 PSF

SHEET INDEX

PV-1: COVER SHEET
PV-2: PV STRUCTURAL
PV-3: PV ELECTRICAL
PV-4: PV EQUIPMENT LABELS
PV-5: PV INSTALL GUIDE

VERSIONS

FOR:	DESIGNER	DATE
CONSTRUCTION	CRM	8/7/2025

PV SYSTEM COVER PAGE

PV-1.1

© 2025 NC SOLAR NOW EXPRESSLY RESERVES ITS COMMON LAW COPYRIGHT AND OTHER PROPERTY RIGHTS IN THESE PLANS. THESE PLANS ARE NOT TO BE REPRODUCED, CHANGED OR COPIED IN ANY FORM OR MANNER WHATSOEVER, NOR ARE THEY TO BE ASSIGNED TO ANY THIRD PARTY WITHOUT FIRST OBTAINING THE EXPRESSED WRITTEN PERMISSION AND CONSENT OF NC SOLAR NOW.

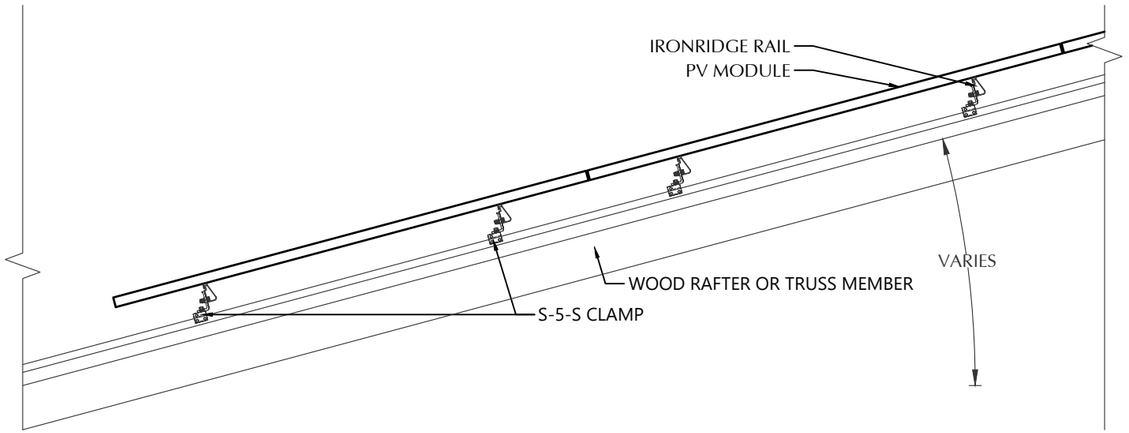

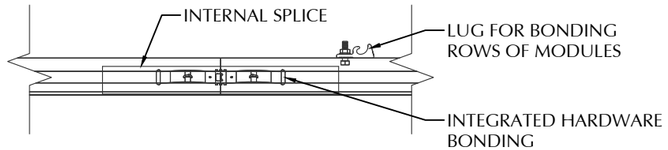

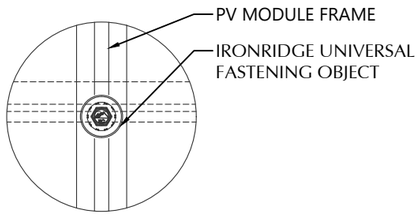

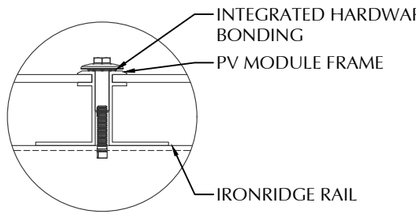

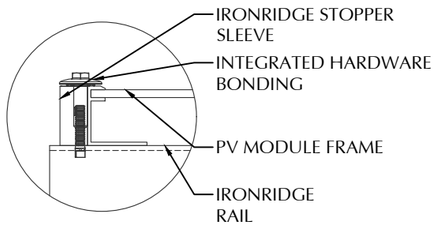

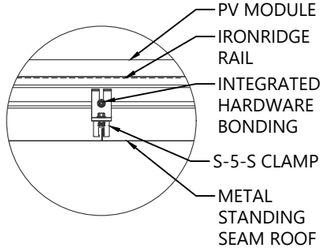

1 ROOF FASTENER DETAIL
NOT TO SCALE

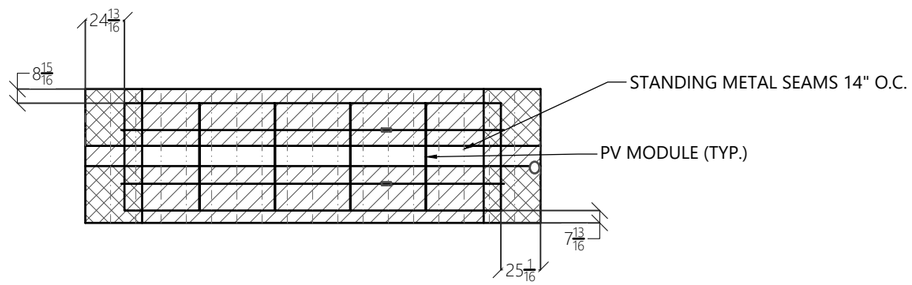

2 ROOF A ARRAY LAYOUT
1/8" = 1'-0"

STATEMENT OF STRUCTURAL COMPLIANCE

THE EXISTING ROOF STRUCTURE HAS BEEN DESIGNED TO SUPPORT THE ADDITIONAL LOADS OF THE PROPOSED PV SYSTEM. IN ADDITION, THE RACKING AND FASTENING SYSTEM SHALL BE CAPABLE OF SECURING THE SYSTEM TO THE STRUCTURE UNDER DESIGN CONDITIONS WHEN INSTALLED PROPERLY AND IN ACCORDANCE WITH THE RACKING AND FASTENING ARRANGEMENT DETAILED WITHIN THESE DRAWINGS.

NAME: ANDREW W. KING, PE

SIGNED:

PV MODULES

MAKE	REC
MODEL	REC460AA PURE-RX
WIDTH	47.40 IN
LENGTH	68.00 IN
THICKNESS	30 MM
WEIGHT	50.00 LBS.
ARRAY AREA	112 SQFT.
ARRAY WEIGHT	280 LBS.

ROOF SUMMARY

STRUCTURE:	
TYPE	RAFTERS
MATERIAL	SOUTHERN PINE #2
SIZE	2 X 6
SPACING	16 IN O.C.
EFFECTIVE SPAN	70 IN
PITCH	8/12
DENSITY	30 LBS./CU.FT.
DECKING:	
TYPE	OSB
MATERIAL	COMPOSITE
THICKNESS	7/16 IN
WEIGHT	1.60 LBS/SQFT
ROOFING:	
TYPE	STANDING SEAM METAL
MATERIAL	METAL
WEIGHT	1.30 LBS./SQFT.

ROOF MOUNT SUMMARY

MAXIMUM (IN)	MOUNT SPACING	RAIL OVERHANG
WIND ZONE 1	28 IN	14 IN
WIND ZONE 2	28 IN	11 IN
WIND ZONE 3	14 IN	9 IN

ROOF LOADING

GROUND SNOW LOAD:	15 LBS./SQFT.
LIVE LOAD	20 LBS./SQFT.
DEAD LOAD	
ROOFING	2.9 LBS/SQFT.
PV ARRAY	2.5 LBS./SQFT.
TOTAL	5.4 LBS./SQFT.
WIND LOAD:	
UPLIFT ZONE 1	-24.6 LBS./SQFT.
UPLIFT ZONE 2	-29.0 LBS./SQFT.
UPLIFT ZONE 3	-29.0 LBS./SQFT.
DOWNWARD	23.0 LBS./SQFT.
FASTENER LOAD:	
UPLIFT ZONE 1	-163 LBS.
UPLIFT ZONE 2	-192 LBS.
UPLIFT ZONE 3	-96 LBS.
DOWNWARD	152 LBS.

ROOF MOUNT & FASTENER

ROOF MOUNT:	
MAKE	S-5!
MODEL	S-5-S
MATERIAL	ALUMINUM
FASTENER:	
MAKE	S-5!
MODEL	SET SCREW
MATERIAL	STAINLESS STEEL
SIZE	3/8-24 X 0.80"
GENERAL:	
WEIGHT	0.39 LBS.
FASTENERS PER MOUNT	2
MAX. PULL-OUT FORCE	426.0 LBS.
SAFETY FACTOR	2
DESIGN PULL-OUT FORCE	213.0 LBS.

MOUNTING RAILS

MAKE	IRONRIDGE
MODEL	XR10
MATERIAL	ALUMINUM
WEIGHT	0.036 LBS/IN
SPACING	34 IN

NC SOLAR NOW

CLIENT INFO

PHYLLIS THOMAS
702 GIMGHOUL ROAD
CHAPEL HILL, NC 27514

PROJECT INFO

DC INPUT:	9.200 kW
AC OUTPUT:	23.000 kW
DOI INSPT. METHOD:	OPTION 2

Model Energy
300 Fayetteville St.
#1430
Raleigh, NC 27602
919-274-9905
ModelEnergy.com
P-1194

NORTH CAROLINA PROFESSIONAL SEAL 035699 ENGINEER ANDREW W. KING
08-08-2025

CODE REFERENCES

NATIONAL ELECTRICAL CODE v. 2017
NC FIRE PROTECTION CODE v. 2018
NC BUILDING CODE v. 2018
NC RESIDENTIAL CODE v. 2018
ACSE v. 7-10

SITE CONDITIONS

WIND SPEED:	120 MPH
RISK CATEGORY:	II
EXPOSURE:	B
SNOW:	15 PSF

SHEET INDEX

PV-1: COVER SHEET
PV-2: PV STRUCTURAL
PV-3: PV ELECTRICAL
PV-4: PV EQUIPMENT LABELS
PV-5: PV INSTALL GUIDE

VERSIONS

FOR:	DESIGNER	DATE
CONSTRUCTION	CRM	8/7/2025

PV SYSTEM STRUCTURAL

PV-2.1

© 2025 NC SOLAR NOW EXPRESSLY RESERVES ITS COMMON LAW COPYRIGHT AND OTHER PROPERTY RIGHTS IN THESE PLANS. THESE PLANS ARE NOT TO BE REPRODUCED, CHANGED OR COPIED IN ANY FORM OR MANNER WHATSOEVER, NOR ARE THEY TO BE ASSIGNED TO ANY THIRD PARTY WITHOUT FIRST OBTAINING THE EXPRESSED WRITTEN PERMISSION AND CONSENT OF NC SOLAR NOW.

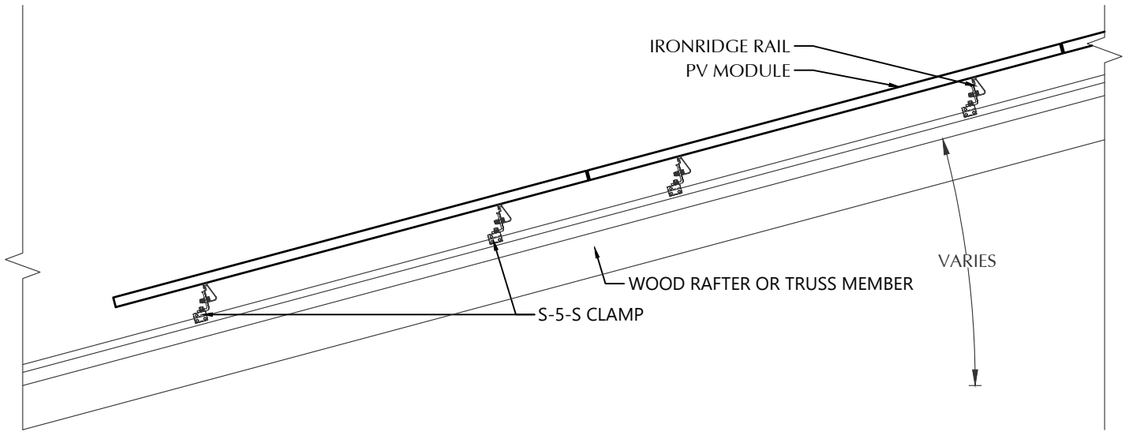

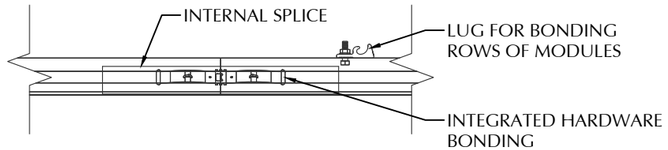

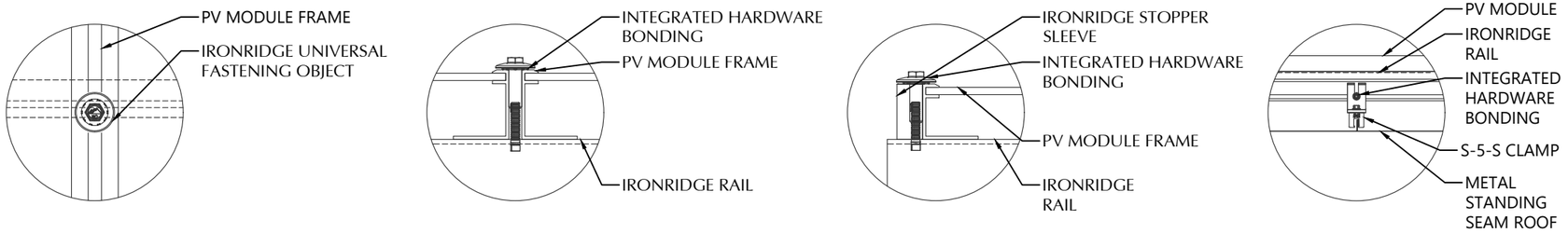

1 ROOF FASTENER DETAIL
NOT TO SCALE

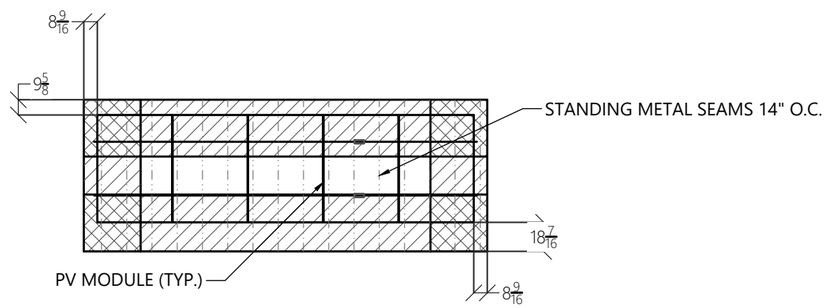

2 ROOF B ARRAY LAYOUT
1/8" = 1'-0"

STATEMENT OF STRUCTURAL COMPLIANCE

THE EXISTING ROOF STRUCTURE HAS BEEN DESIGNED TO SUPPORT THE ADDITIONAL LOADS OF THE PROPOSED PV SYSTEM. IN ADDITION, THE RACKING AND FASTENING SYSTEM SHALL BE CAPABLE OF SECURING THE SYSTEM TO THE STRUCTURE UNDER DESIGN CONDITIONS WHEN INSTALLED PROPERLY AND IN ACCORDANCE WITH THE RACKING AND FASTENING ARRANGEMENT DETAILED WITHIN THESE DRAWINGS.

NAME: ANDREW W. KING, PE

SIGNED:

PV MODULES

MAKE	REC
MODEL	REC460AA PURE-RX
WIDTH	47.40 IN
LENGTH	68.00 IN
THICKNESS	30 MM
WEIGHT	50.00 LBS.
ARRAY AREA	112 SQFT.
ARRAY WEIGHT	280 LBS.

ROOF SUMMARY

STRUCTURE:	
TYPE	RAFTERS
MATERIAL	SOUTHERN PINE #2
SIZE	2 X 6
SPACING	16 IN O.C.
EFFECTIVE SPAN	83 IN
PITCH	7/12
DENSITY	30 LBS./CU.FT.
DECKING:	
TYPE	OSB
MATERIAL	COMPOSITE
THICKNESS	7/16 IN
WEIGHT	1.60 LBS/SQFT
ROOFING:	
TYPE	STANDING SEAM METAL
MATERIAL	METAL
WEIGHT	1.30 LBS./SQFT.

ROOF MOUNT SUMMARY

MAXIMUM (IN)	MOUNT SPACING	RAIL OVERHANG
WIND ZONE 1	28 IN	14 IN
WIND ZONE 2	28 IN	11 IN
WIND ZONE 3	14 IN	9 IN

ROOF LOADING

GROUND SNOW LOAD:	15 LBS./SQFT.
LIVE LOAD	20 LBS./SQFT.
DEAD LOAD	
ROOFING	2.9 LBS/SQFT.
PV ARRAY	2.5 LBS./SQFT.
TOTAL	5.4 LBS./SQFT.
WIND LOAD:	
UPLIFT ZONE 1	-24.6 LBS./SQFT.
UPLIFT ZONE 2	-29.0 LBS./SQFT.
UPLIFT ZONE 3	-29.0 LBS./SQFT.
DOWNWARD	23.0 LBS./SQFT.
FASTENER LOAD:	
UPLIFT ZONE 1	-163 LBS.
UPLIFT ZONE 2	-192 LBS.
UPLIFT ZONE 3	-96 LBS.
DOWNWARD	152 LBS.

ROOF MOUNT & FASTENER

ROOF MOUNT:	
MAKE	S-5!
MODEL	S-5-S
MATERIAL	ALUMINUM
FASTENER:	
MAKE	S-5!
MODEL	SET SCREW
MATERIAL	STAINLESS STEEL
SIZE	3/8-24 X 0.80"
GENERAL:	
WEIGHT	0.39 LBS.
FASTENERS PER MOUNT	2
MAX. PULL-OUT FORCE	426.0 LBS.
SAFETY FACTOR	2
DESIGN PULL-OUT FORCE	213.0 LBS.

MOUNTING RAILS

MAKE	IRONRIDGE
MODEL	XR10
MATERIAL	ALUMINUM
WEIGHT	0.036 LBS/IN
SPACING	34 IN

NC SOLAR NOW

CLIENT INFO

PHYLLIS THOMAS
702 GIMGHOUL ROAD
CHAPEL HILL, NC 27514

PROJECT INFO

DC INPUT:	9.200 kW
AC OUTPUT:	23.000 kW
DOI INSPT. METHOD:	OPTION 2

Model Energy
300 Fayetteville St.
#1430
Raleigh, NC 27602
919-274-9905
ModelEnergy.com
P-1194

NORTH CAROLINA PROFESSIONAL SEAL 035699 ENGINEER ANDREW W. KING
08-08-2025

CODE REFERENCES

NATIONAL ELECTRICAL CODE v. 2017
NC FIRE PROTECTION CODE v. 2018
NC BUILDING CODE v. 2018
NC RESIDENTIAL CODE v. 2018
ACSE v. 7-10

SITE CONDITIONS

WIND SPEED:	120 MPH
RISK CATEGORY:	II
EXPOSURE:	B
SNOW:	15 PSF

SHEET INDEX

PV-1: COVER SHEET
PV-2: PV STRUCTURAL
PV-3: PV ELECTRICAL
PV-4: PV EQUIPMENT LABELS
PV-5: PV INSTALL GUIDE

VERSIONS

FOR:	DESIGNER	DATE
CONSTRUCTION	CRM	8/7/2025

PV SYSTEM STRUCTURAL

PV-2.2

© 2025 NC SOLAR NOW EXPRESSLY RESERVES ITS COMMON LAW COPYRIGHT AND OTHER PROPERTY RIGHTS IN THESE PLANS. THESE PLANS ARE NOT TO BE REPRODUCED, CHANGED OR COPIED IN ANY FORM OR MANNER WHATSOEVER, NOR ARE THEY TO BE ASSIGNED TO ANY THIRD PARTY WITHOUT FIRST OBTAINING THE EXPRESSED WRITTEN PERMISSION AND CONSENT OF NC SOLAR NOW.

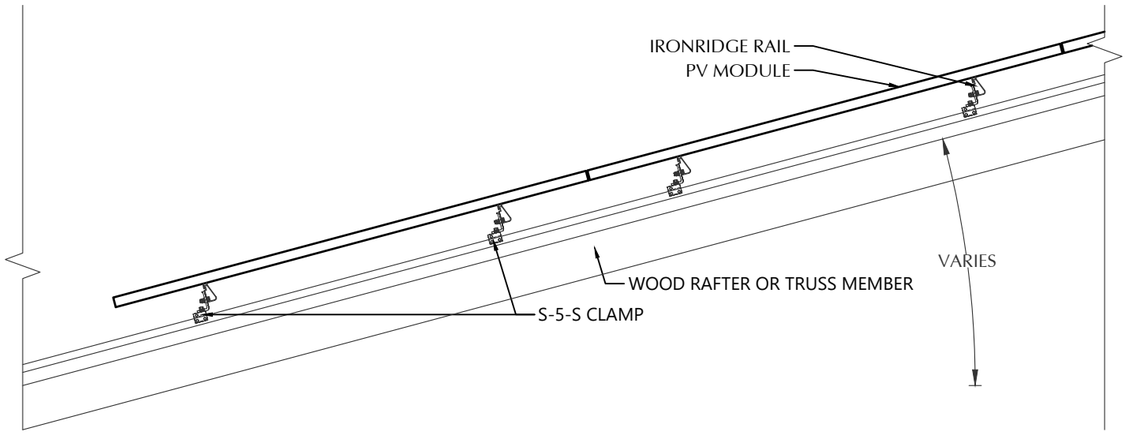

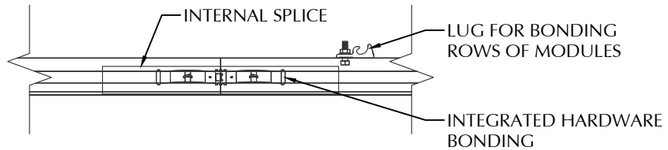

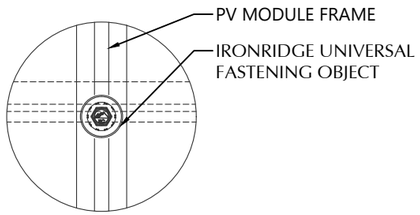

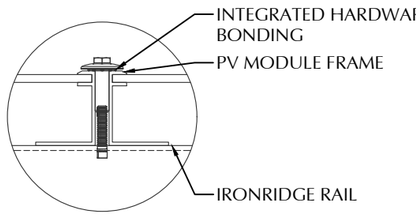

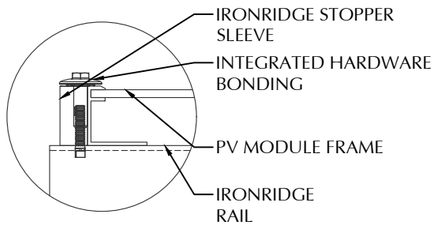

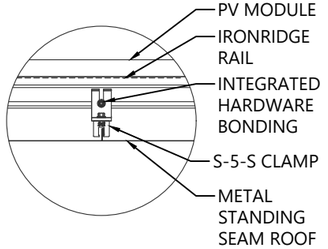

1 ROOF FASTENER DETAIL
NOT TO SCALE

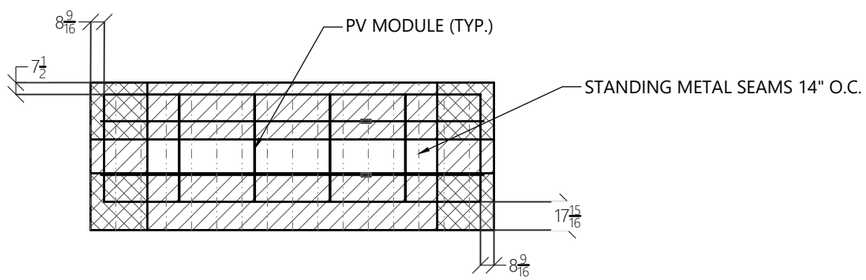

2 ROOF C ARRAY LAYOUT
1/8" = 1'-0"

STATEMENT OF STRUCTURAL COMPLIANCE

THE EXISTING ROOF STRUCTURE HAS BEEN DESIGNED TO SUPPORT THE ADDITIONAL LOADS OF THE PROPOSED PV SYSTEM. IN ADDITION, THE RACKING AND FASTENING SYSTEM SHALL BE CAPABLE OF SECURING THE SYSTEM TO THE STRUCTURE UNDER DESIGN CONDITIONS WHEN INSTALLED PROPERLY AND IN ACCORDANCE WITH THE RACKING AND FASTENING ARRANGEMENT DETAILED WITHIN THESE DRAWINGS.

NAME: ANDREW W. KING, PE

SIGNED:

PV MODULES

MAKE	REC
MODEL	REC460AA PURE-RX
WIDTH	47.40 IN
LENGTH	68.00 IN
THICKNESS	30 MM
WEIGHT	50.00 LBS.
ARRAY AREA	112 SQFT.
ARRAY WEIGHT	280 LBS.

ROOF SUMMARY

STRUCTURE:	
TYPE	RAFTERS
MATERIAL	SOUTHERN PINE #2
SIZE	2 X 6
SPACING	16 IN O.C.
EFFECTIVE SPAN	81 IN
PITCH	7/12
DENSITY	30 LBS./CU.FT.
DECKING:	
TYPE	OSB
MATERIAL	COMPOSITE
THICKNESS	7/16 IN
WEIGHT	1.60 LBS/SQFT
ROOFING:	
TYPE	STANDING SEAM METAL
MATERIAL	METAL
WEIGHT	1.30 LBS./SQFT.

ROOF MOUNT SUMMARY

MAXIMUM (IN)	MOUNT SPACING	RAIL OVERHANG
WIND ZONE 1	28 IN	14 IN
WIND ZONE 2	28 IN	11 IN
WIND ZONE 3	14 IN	9 IN

ROOF LOADING

GROUND SNOW LOAD:	15 LBS./SQFT.
LIVE LOAD	20 LBS./SQFT.
DEAD LOAD	
ROOFING	2.9 LBS/SQFT.
PV ARRAY	2.5 LBS./SQFT.
TOTAL	5.4 LBS./SQFT.
WIND LOAD:	
UPLIFT ZONE 1	-24.6 LBS./SQFT.
UPLIFT ZONE 2	-29.0 LBS./SQFT.
UPLIFT ZONE 3	-29.0 LBS./SQFT.
DOWNWARD	23.0 LBS./SQFT.
FASTENER LOAD:	
UPLIFT ZONE 1	-163 LBS.
UPLIFT ZONE 2	-192 LBS.
UPLIFT ZONE 3	-96 LBS.
DOWNWARD	152 LBS.

ROOF MOUNT & FASTENER

ROOF MOUNT:	
MAKE	S-5!
MODEL	S-5-S
MATERIAL	ALUMINUM
FASTENER:	
MAKE	S-5!
MODEL	SET SCREW
MATERIAL	STAINLESS STEEL
SIZE	3/8-24 X 0.80"
GENERAL:	
WEIGHT	0.39 LBS.
FASTENERS PER MOUNT	2
MAX. PULL-OUT FORCE	426.0 LBS.
SAFETY FACTOR	2
DESIGN PULL-OUT FORCE	213.0 LBS.

MOUNTING RAILS

MAKE	IRONRIDGE
MODEL	XR10
MATERIAL	ALUMINUM
WEIGHT	0.036 LBS/IN
SPACING	34 IN

NC SOLAR NOW

CLIENT INFO

PHYLLIS THOMAS
702 GIMGHOUL ROAD
CHAPEL HILL, NC 27514

PROJECT INFO

DC INPUT:	9.200 kW
AC OUTPUT:	23.000 kW
DOI INSPT. METHOD:	OPTION 2

Model Energy
300 Fayetteville St.
#1430
Raleigh, NC 27602
919-274-9905
ModelEnergy.com
P-1194

NORTH CAROLINA PROFESSIONAL SEAL 035699 ENGINEER ANDREW W. KING
08-08-2025

CODE REFERENCES

NATIONAL ELECTRICAL CODE v. 2017
NC FIRE PROTECTION CODE v. 2018
NC BUILDING CODE v. 2018
NC RESIDENTIAL CODE v. 2018
ACSE v. 7-10

SITE CONDITIONS

WIND SPEED:	120 MPH
RISK CATEGORY:	II
EXPOSURE:	B
SNOW:	15 PSF

SHEET INDEX

PV-1: COVER SHEET
PV-2: PV STRUCTURAL
PV-3: PV ELECTRICAL
PV-4: PV EQUIPMENT LABELS
PV-5: PV INSTALL GUIDE

VERSIONS

FOR:	DESIGNER	DATE
CONSTRUCTION	CRM	8/7/2025

PV SYSTEM STRUCTURAL

PV-2.3

© 2025 NC SOLAR NOW EXPRESSLY RESERVES ITS COMMON LAW COPYRIGHT AND OTHER PROPERTY RIGHTS IN THESE PLANS. THESE PLANS ARE NOT TO BE REPRODUCED, CHANGED OR COPIED IN ANY FORM OR MANNER WHATSOEVER, NOR ARE THEY TO BE ASSIGNED TO ANY THIRD PARTY WITHOUT FIRST OBTAINING THE EXPRESSED WRITTEN PERMISSION AND CONSENT OF NC SOLAR NOW.

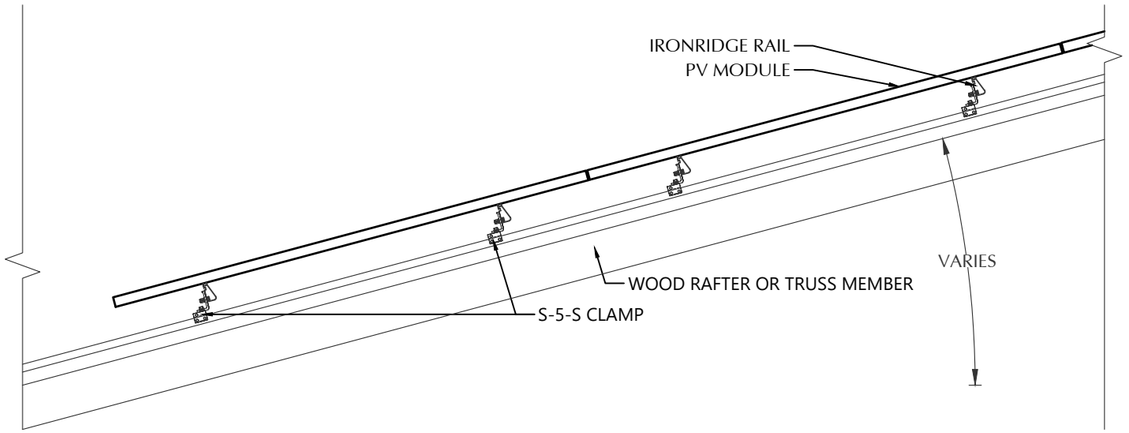

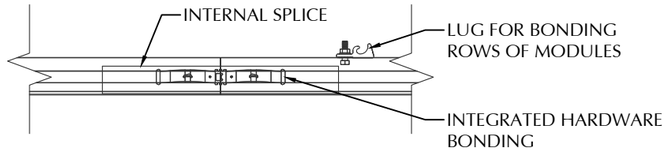

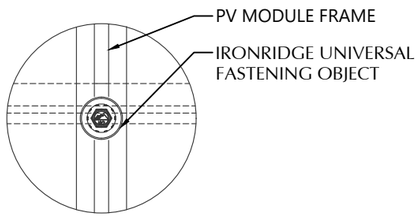

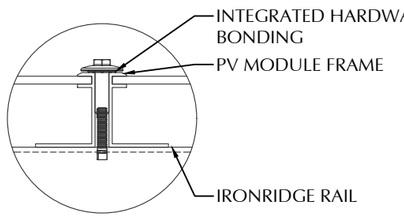

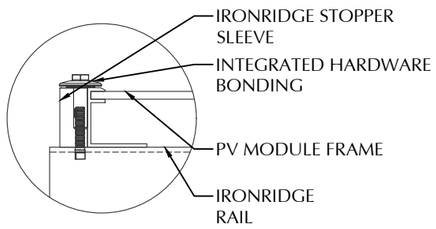

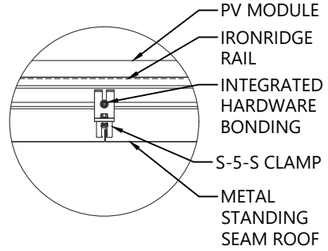

1 ROOF FASTENER DETAIL
NOT TO SCALE

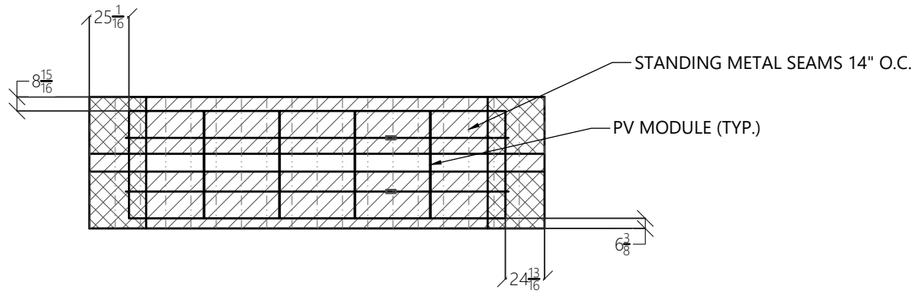

2 ROOF D ARRAY LAYOUT
1/8" = 1'-0"

STATEMENT OF STRUCTURAL COMPLIANCE

THE EXISTING ROOF STRUCTURE HAS BEEN DESIGNED TO SUPPORT THE ADDITIONAL LOADS OF THE PROPOSED PV SYSTEM. IN ADDITION, THE RACKING AND FASTENING SYSTEM SHALL BE CAPABLE OF SECURING THE SYSTEM TO THE STRUCTURE UNDER DESIGN CONDITIONS WHEN INSTALLED PROPERLY AND IN ACCORDANCE WITH THE RACKING AND FASTENING ARRANGEMENT DETAILED WITHIN THESE DRAWINGS.

NAME: ANDREW W. KING, PE

SIGNED:

PV MODULES

MAKE	REC
MODEL	REC460AA PURE-RX
WIDTH	47.40 IN
LENGTH	68.00 IN
THICKNESS	30 MM
WEIGHT	50.00 LBS.
ARRAY AREA	112 SQFT.
ARRAY WEIGHT	280 LBS.

ROOF SUMMARY

STRUCTURE:	
TYPE	RAFTERS
MATERIAL	SOUTHERN PINE #2
SIZE	2 X 6
SPACING	16 IN O.C.
EFFECTIVE SPAN	69 IN
PITCH	8/12
DENSITY	30 LBS./CU.FT.
DECKING:	
TYPE	OSB
MATERIAL	COMPOSITE
THICKNESS	7/16 IN
WEIGHT	1.60 LBS/SQFT
ROOFING:	
TYPE	STANDING SEAM METAL
MATERIAL	METAL
WEIGHT	1.30 LBS./SQFT.

ROOF MOUNT SUMMARY

MAXIMUM (IN)	MOUNT SPACING	RAIL OVERHANG
WIND ZONE 1	28 IN	14 IN
WIND ZONE 2	28 IN	11 IN
WIND ZONE 3	14 IN	9 IN

ROOF LOADING

GROUND SNOW LOAD:	15 LBS./SQFT.
LIVE LOAD	20 LBS./SQFT.
DEAD LOAD	
ROOFING	2.9 LBS/SQFT.
PV ARRAY	2.5 LBS./SQFT.
TOTAL	5.4 LBS./SQFT.
WIND LOAD:	
UPLIFT ZONE 1	-24.6 LBS./SQFT.
UPLIFT ZONE 2	-29.0 LBS./SQFT.
UPLIFT ZONE 3	-29.0 LBS./SQFT.
DOWNWARD	23.0 LBS./SQFT.
FASTENER LOAD:	
UPLIFT ZONE 1	-163 LBS.
UPLIFT ZONE 2	-192 LBS.
UPLIFT ZONE 3	-96 LBS.
DOWNWARD	152 LBS.

ROOF MOUNT & FASTENER

ROOF MOUNT:	
MAKE	S-5!
MODEL	S-5-S
MATERIAL	ALUMINUM
FASTENER:	
MAKE	S-5!
MODEL	SET SCREW
MATERIAL	STAINLESS STEEL
SIZE	3/8-24 X 0.80"
GENERAL:	
WEIGHT	0.39 LBS.
FASTENERS PER MOUNT	2
MAX. PULL-OUT FORCE	426.0 LBS.
SAFETY FACTOR	2
DESIGN PULL-OUT FORCE	213.0 LBS.

MOUNTING RAILS

MAKE	IRONRIDGE
MODEL	XR10
MATERIAL	ALUMINUM
WEIGHT	0.036 LBS/IN
SPACING	34 IN

NC SOLAR NOW

CLIENT INFO

PHYLLIS THOMAS
702 GIMGHOUL ROAD
CHAPEL HILL, NC 27514

PROJECT INFO

DC INPUT:	9.200 kW
AC OUTPUT:	23.000 kW
DOI INSPT. METHOD:	OPTION 2

Model Energy
300 Fayetteville St.
#1430
Raleigh, NC 27602
919-274-9905
ModelEnergy.com
P-1194

NORTH CAROLINA PROFESSIONAL SEAL 035699 ENGINEER ANDREW W. KING
08-08-2025

CODE REFERENCES

NATIONAL ELECTRICAL CODE v. 2017
NC FIRE PROTECTION CODE v. 2018
NC BUILDING CODE v. 2018
NC RESIDENTIAL CODE v. 2018
ACSE v. 7-10

SITE CONDITIONS

WIND SPEED:	120 MPH
RISK CATEGORY:	II
EXPOSURE:	B
SNOW:	15 PSF

SHEET INDEX

PV-1: COVER SHEET
PV-2: PV STRUCTURAL
PV-3: PV ELECTRICAL
PV-4: PV EQUIPMENT LABELS
PV-5: PV INSTALL GUIDE

VERSIONS

FOR:	DESIGNER	DATE
CONSTRUCTION	CRM	8/7/2025

PV SYSTEM STRUCTURAL

PV-2.4

© 2025 NC SOLAR NOW EXPRESSLY RESERVES ITS COMMON LAW COPYRIGHT AND OTHER PROPERTY RIGHTS IN THESE PLANS. THESE PLANS ARE NOT TO BE REPRODUCED, CHANGED OR COPIED IN ANY FORM OR MANNER WHATSOEVER, NOR ARE THEY TO BE ASSIGNED TO ANY THIRD PARTY WITHOUT FIRST OBTAINING THE EXPRESSED WRITTEN PERMISSION AND CONSENT OF NC SOLAR NOW.

CONDUCTOR SCHEDULE

TAG	CURRENT CARRYING CONDUCTORS			GROUNDING CONDUCTORS			CONDUIT/RACEWAY			NOTES
	QTY.	SIZE	INSULATION	QTY.	SIZE	INSULATION	QTY.	SIZE	LOCATION	
C1	4	10 AWG	PV WIRE	1	6 AWG	BARE	-	-	FREE AIR	1,5
C2	4	10 AWG	THWN-2	1	10 AWG	THWN-2	1	3/4"	EXT/INT	2,4,5
C2.1	8	10 AWG	THWN-2	1	10 AWG	THWN-2	1	3/4"	EXT/INT/BURIED	2,4,5
C3	3	6 AWG	THWN-2	1	10 AWG	THWN-2	1	1"	EXT/INT	2,4,5
C4	3	4/0 AWG ALUMINUM	XHHW	1	6 AWG	THWN-2	1	2"	EXT/INT	2,4,5,6
XC	-	-	-	-	-	-	-	-	-	3

NOTES:

1. MANUFACTURER PROVIDED, UL LISTED WIRING HARNESS FOR USE ON EXPOSED ROOFS
2. CONDUIT SIZE SHOWN IS CODE MINIMUM. LARGER SIZES ARE ALLOWED.
3. EXISTING CONDUCTORS, FIELD VERIFY
4. EQUIPMENT TERMINAL RATING SHALL BE A MINIMUM OF 75°C AT BOTH END OF CONDUCTOR
5. PLEASE REFERENCES NOTES ON PV-4.1 FOR ADDITIONAL DETAIL
6. SERVICE & FEEDER GROUNDED CONDUCTORS MAY BE SIZED SMALLER THAN UNGROUNDED CONDUCTORS PER NEC 310.15(B)(7)

DC DISCONNECT

MAKE	IMO
MODEL	SI32-PEL64R-8
ENCL. RATING	NEMA 3R
VOLT. RATING	600 VOLTS
AMP RATING	32 AMPS
UL LIST. (Y/N)	YES
PROTECT. RATING	NEMA TYPE 4X
FUSED (Y/N)	NO
FUSE RATING	N/A

METER COMBO (EXISTING)

MAKE	EATON-CUTLER HAMMER
MODEL	NA
ENCL. RATING	NEMA 3R
VOLT. RATING	240
BUS RATING	200 AMPS
UL LIST. (Y/N)	YES
MAIN BREAKER (Y/N)	YES
MAIN BREAKER RATING	200 AMPS

- MAIN BREAKER SERVES AS SERVICE DISCONNECT
- RELOCATE FEED THROUGH LUGS TO POWER ENERGY MANAGEMENT

MAX. DC VOLTAGE CALCULATION

$V_{OC}MAX = V_{OC} * (1 + (TMIN - TSTC) * (VTC / 100))$

$V_{OC}MAX$	71.34
MAX STRING VOLTAGE	356.7

MAX. DC CURRENT CALCULATION

$I_{SC}MAX = I_{SC} * TCX$

$I_{SC}MAX$ (AMPS)	11.10

JUNCTION BOX

MAKE	GENERIC
MODEL	NA
ENCL. RATING	NEMA 1
VOLT. RATING	240 VOLTS
AMP RATING	60 AMPS
UL LIST. (Y/N)	YES
FUSED (Y/N)	NO
FUSE RATING	N/A

EMERGENCY STOP

MAKE	EATON
MODEL	M22-PVT
ENCL. RATING	NEMA 4X
UL LIST. (Y/N)	YES

PV MODULE

MAKE	REC
MODEL	REC460AA PURE-RX
NOM. POWER (PNOM)	460 WATTS
NOM. VOLT. (VMPP)	54.9 VOLTS
O.C. VOLT (VOC)	65.8 VOLTS
MAX. SYS. VOLT.	1000 VOLTS
NOM. CURR. (IMPP)	8.4 AMPS
S.C. CURR. (ISC)	8.9 AMPS
TEMP. COEF. (PMPP)	-0.24 %/C
TEMP. COEF. (Voc)	-0.24 %/C
MAX SERIES FUSE	25 AMPS
UL COMPLIANT (Y/N)	YES

AC DISCONNECT 'A' & 'B'

MAKE	GENERIC
MODEL	NA
ENCL. RATING	NEMA 3R
VOLT. RATING	240 VOLTS
AMP RATING	60 AMPS
UL LIST. (Y/N)	YES
FUSED (Y/N)	NO
FUSE RATING	N/A

- LOAD-BREAK RATED
- VISIBLE OPEN
- LOCKABLE IN OPEN POSITION
- INSTALL ADJACENT TO METER
- DISCONNECT TO BE READILY ACCESSIBLE TO UTILITY COMPANY PERSONNEL AT ALL TIMES
- DISCONNECT MARKED AND RATED PER NEC SECTION 690.13 AND 705.10
- CO-LOCATE BOTH DISCONNECTS BY UTILITY METER

MID-CIRCUIT INTERRUPTER

MAKE	TESLA
MODEL	MCI-2
ENCL. RATING	NEMA 4X / IP65
DC INPUT:	
CONNECTOR TYPE	MC4
MAX IN-LINE PV MODULES	3
MAX MCI PER STRING	5
MAX. SYSTEM VOLTAGE	1000 VOLTS
NOM. CURRENT (Imp)	15.00 AMPS
MAX. CURRENT (Isc)	19.00 AMPS
RSD COMPLIANT (Y/N)	YES
UL COMPLIANT (Y/N)	YES

ROOFTOP JUNCTION BOX

MAKE	SOLADECK
PROTECT. RATING	NEMA TYPE 3R
UL LIST. (Y/N)	YES

ENERGY MANAGEMENT

MAKE	TESLA
MODEL	BACKUP GATEWAY 3
ENCL. RATING	NEMA 3R
VOLT. RATING	240 VOLTS
DISCONNECT CURR.	200 AMPS
UL LIST. (Y/N)	YES
MAIN BREAKER (Y/N)	NO
MAIN BREAKER RATING	N/A

- TROUGH MAY BE USED IF NECESSARY
- LAND EACH POWERWALL 3 VIA ITS OWN 60A BREAKER ON INTERNAL PANELBOARD
- FEED MAIN BREAKER ENCLOSURE VIA BACKUP LUGS

DC/AC INVERTER & BATTERY 'A&B'

MAKE	TESLA POWERWALL 3
MODEL	1707000-XX-Y
INVERTER INFO:	
DC INPUT:	
MAX POWER	20000 WATTS
INPUT VOLT. RANGE	60-550 VOLTS
MPPT VOLT. RANGE	150-480 VOLTS
MAX. MPPT CUR.	13 AMPS
STRING INPUTS	6 MPPTs
AC OUTPUT:	
MAX. CONT. POWER	11500 WATTS
NOM. VOLT.	240 VOLTS
MAX. CONT. CURRENT	48.00 AMPS
RAPID SHUTDOWN (Y/N)	YES
PROTECT. RATING	NEMA TYPE 3R
BATTERY INFO:	
USABLE ENERGY	13.5 kWh
NOM. VOLT.	240 VOLTS
MAX. CONT. CHARGE	5000 WATTS
UL LIST. (Y/N)	YES

- SET SITE EXPORT LIMIT TO 20kW

MAIN BREAKER ENCLOSURE

MAKE	GENERIC
MODEL	N/A
ENCL. RATING	NEMA 3R
VOLT. RATING	240
AMP RATING	200 AMPS
UL LIST. (Y/N)	YES
MAIN BREAKER (Y/N)	YES
MAIN BREAKER RATING	200 AMPS

BACKED-UP LOADS PANEL (EXISTING)

MAKE	CUTLER-HAMMER
MODEL	N/A
ENCL. RATING	NEMA 1
VOLT. RATING	240
BUS RATING	200 AMPS
UL LIST. (Y/N)	YES
MAIN BREAKER (Y/N)	NO
MAIN BREAKER RATING	N/A

NC SOLAR NOW

CLIENT INFO

PHYLLIS THOMAS
702 GIMGHOUL ROAD
CHAPEL HILL, NC 27514

PROJECT INFO

DC INPUT:	9.200 kW
AC OUTPUT:	23.000 kW
DOI INSPT. METHOD:	OPTION 2

Model Energy
300 Fayetteville St.
#1430
Raleigh, NC 27602
919-274-9905
ModelEnergy.com
P-1194

NORTH CAROLINA PROFESSIONAL SEAL 035699 ENGINEER ANDREW W. KING
08-08-2025

CODE REFERENCES

NATIONAL ELECTRICAL CODE v. 2017
NC FIRE PROTECTION CODE v. 2018
NC BUILDING CODE v. 2018
NC RESIDENTIAL CODE v. 2018
ACSE v. 7-10

SITE CONDITIONS

WIND SPEED:	120 MPH
RISK CATEGORY:	II
EXPOSURE:	B
SNOW:	15 PSF

SHEET INDEX

PV-1: COVER SHEET
PV-2: PV STRUCTURAL
PV-3: PV ELECTRICAL
PV-4: PV EQUIPMENT LABELS
PV-5: PV INSTALL GUIDE

VERSIONS

FOR:	DESIGNER	DATE
CONSTRUCTION	CRM	8/7/2025

PV SYSTEM ELECTRICAL

PV-3.1

© 2025 NC SOLAR NOW EXPRESSLY RESERVES ITS COMMON LAW COPYRIGHT AND OTHER PROPERTY RIGHTS IN THESE PLANS. THESE PLANS ARE NOT TO BE REPRODUCED, CHANGED OR COPIED IN ANY FORM OR MANNER WHATSOEVER, NOR ARE THEY TO BE ASSIGNED TO ANY THIRD PARTY WITHOUT FIRST OBTAINING THE EXPRESSED WRITTEN PERMISSION AND CONSENT OF NC SOLAR NOW.

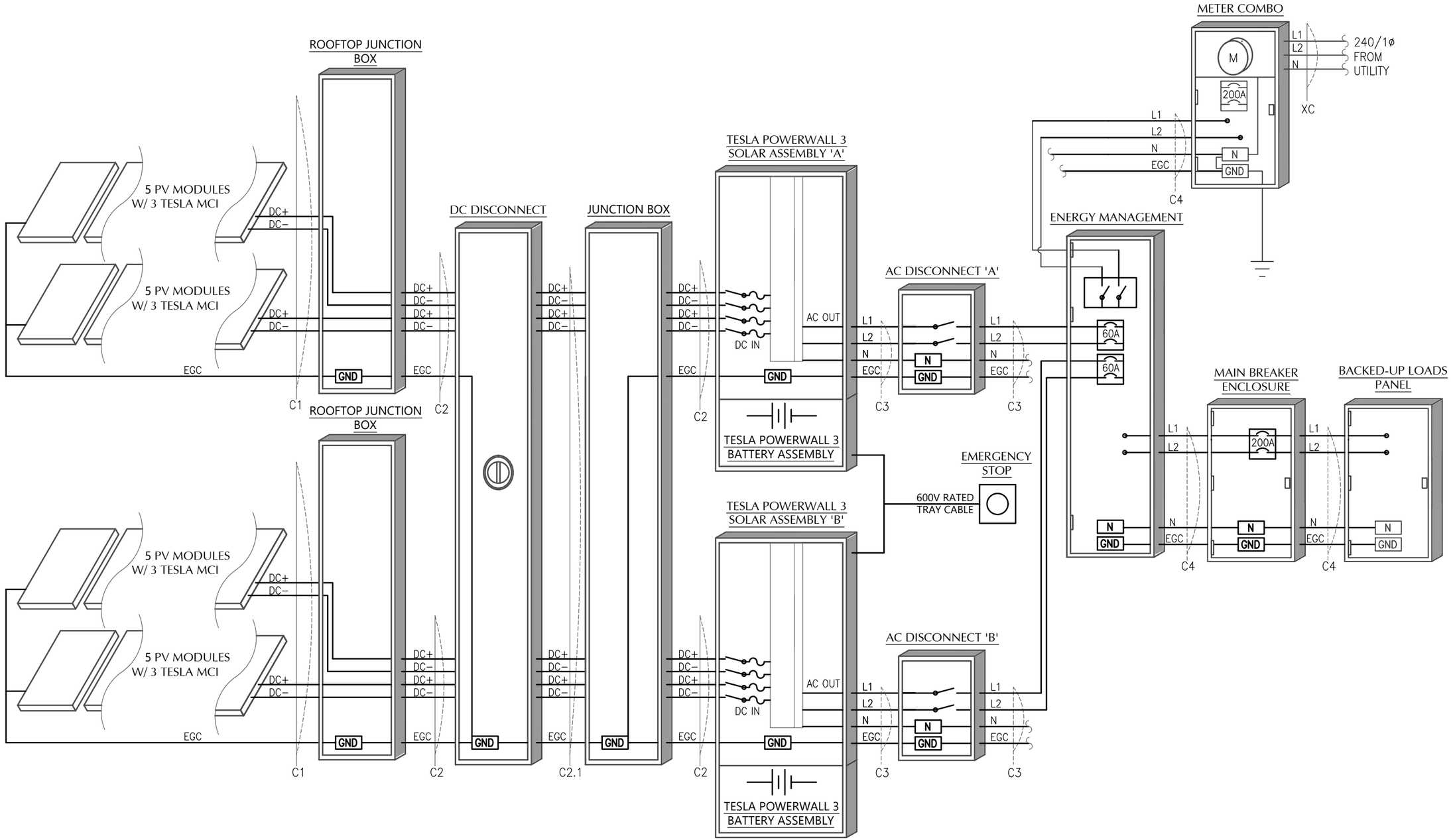

1 ELECTRICAL SCHEMATIC
NTS

CLIENT INFO

PHYLLIS THOMAS
702 GIMGHOUL ROAD
CHAPEL HILL, NC 27514

PROJECT INFO

DC INPUT:	9.200 kW
AC OUTPUT:	23.000 kW
DOI INSPT. METHOD:	OPTION 2

Model Energy
300 Fayetteville St.
#1430
Raleigh, NC 27602
919-274-9905
ModelEnergy.com
P-1194

NORTH CAROLINA PROFESSIONAL SEAL 035699 ENGINEER ANDREW W. KING
08-08-2025

CODE REFERENCES

NATIONAL ELECTRICAL CODE v. 2017
NC FIRE PROTECTION CODE v. 2018
NC BUILDING CODE v. 2018
NC RESIDENTIAL CODE v. 2018
ACSE v. 7-10

SITE CONDITIONS

WIND SPEED:	120 MPH
RISK CATEGORY:	II
EXPOSURE:	B
SNOW:	15 PSF

SHEET INDEX

PV-1: COVER SHEET
PV-2: PV STRUCTURAL
PV-3: PV ELECTRICAL
PV-4: PV EQUIPMENT LABELS
PV-5: PV INSTALL GUIDE

VERSIONS

FOR:	DESIGNER	DATE
CONSTRUCTION	CRM	8/7/2025

PV SYSTEM ELECTRICAL

PV-3.2

© 2025 NC SOLAR NOW EXPRESSLY RESERVES ITS COMMON LAW COPYRIGHT AND OTHER PROPERTY RIGHTS IN THESE PLANS. THESE PLANS ARE NOT TO BE REPRODUCED, CHANGED OR COPIED IN ANY FORM OR MANNER WHATSOEVER, NOR ARE THEY TO BE ASSIGNED TO ANY THIRD PARTY WITHOUT FIRST OBTAINING THE EXPRESSED WRITTEN PERMISSION AND CONSENT OF NC SOLAR NOW.

WARNING: PHOTOVOLTAIC POWER SOURCE

NEC 690.31 (G)(3)&(4)
PLACE ON ALL JUNCTION BOXES, EXPOSED RACEWAYS, AND OTHER WIRING METHODS EVERY 10' AND ON EVERY SECTION SEPARATED BY ENCLOSURES, WALLS, PARTITIONS, CEILINGS, OR FLOORS.

RAPID SHUTDOWN SWITCH FOR SOLAR PV SYSTEM

NEC 690.56 (C)(3)
PLACE ON RAPID SHUTDOWN SWITCH OR EQUIPMENT WITH INTEGRATED RAPID SHUTDOWN *REFLECTIVE*

PV SYSTEM DISCONNECT

NEC 690.13 (B)
PLACE ON PV SYSTEM DISCONNECTING MEANS.

SOLAR PV SYSTEM EQUIPPED WITH RAPID SHUTDOWN

TURN RAPID SHUTDOWN SWITCH TO THE "OFF" POSITION TO SHUT DOWN PV SYSTEM AND REDUCE SHOCK HAZARD IN THE ARRAY

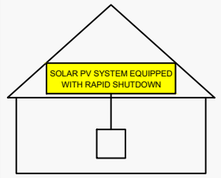

NEC 690.56 (C)(1)(a)
PLACE WITHIN 3FT OF SERVICE DISCONNECTING MEANS TO WHICH THE PV SYSTEMS ARE CONNECTED AND SHALL INDICATE THE LOCATIONS OF RAPID SHUTDOWN SWITCHES

⚠WARNING

THIS EQUIPMENT FED BY MULTIPLE SOURCES. TOTAL RATING OF ALL OVERCURRENT DEVICES EXCLUDING MAIN SUPPLY OVERCURRENT DEVICE SHALL NOT EXCEED AMPACITY OF BUSBAR.

NEC 705.12 (B)(2)(3)(c)

⚠WARNING

THREE POWER SOURCES

SOURCES: UTILITY GRID, BATTERY AND PV SOLAR ELECTRIC SYSTEM

NEC 705.12(B)(3)
PLACE ON ALL EQUIPMENT THAT IS SUPPLIED BY THREE POWER SOURCES

DIRECT CURRENT
PHOTOVOLTAIC POWER SOURCE

MAXIMUM VOLTAGE 600 VDC
MAX CIRCUIT CURRENT 22.2 AMPS

NEC 690.53
PLACE ON ALL DC DISCONNECTING MEANS

PHOTOVOLTAIC SYSTEM AC DISCONNECT

OPERATING VOLTAGE	240	VOLTS
OPERATING CURRENT	48.0	AMPS

NEC 690.54
PLACE ON INTERCONNECTION DISCONNECTING MEANS

SERVICE DISCONNECT LOCATED:
_____

PV/BATTERY DISCONNECT LOCATED:
_____

NEC 705.10
PLACE AT SERVICE EQUIPMENT AND PV SYSTEM DISCONNECTING MEANS.

CAUTION: DO NOT INSTALL ADDITIONAL LOADS IN THIS PANEL

NEC 705.12 (B)(2)(3)(C)

LABEL NOTES:

1. LABELS SHOWN ARE NOT TO SCALE.
2. LABEL MATERIAL SHALL BE SUITABLE FOR THE EQUIPMENT ENVIRONMENT.
3. DC CONDUIT SHALL BE MARKED WITH REQUIRED LABEL EVERY 10 FEET.
4. PHOTOVOLTAIC SYSTEMS SHALL BE PERMANENTLY MARKED AT VARIOUS EQUIPMENT LOCATIONS TO IDENTIFY THAT A PHOTOVOLTAIC SYSTEM IS INSTALLED AND THAT VARIOUS DANGERS ARE PRESENT.
5. EACH PHOTOVOLTAIC SYSTEM DISCONNECTING MEANS SHALL BE PERMANENTLY MARKED TO IDENTIFY IT AS A PHOTOVOLTAIC SYSTEM DISCONNECT.
6. WHERE ALL TERMINALS OF A DISCONNECTING MEANS MAY BE ENERGIZED IN THE OPEN POSITION, A WARNING SIGN SHALL BE MOUNTED ON OR ADJACENT TO THE DISCONNECT.
7. A PERMANENT LABEL FOR THE DIRECT-CURRENT PHOTOVOLTAIC POWER SOURCE SHALL BE PROVIDED AT THE DC DISCONNECT MEANS.
8. A PERMANENT PLAQUE OR DIRECTORY, DENOTING ALL ELECTRIC POWER SOURCES SERVING THE PREMISES, SHALL BE INSTALLED AT EACH SERVICE EQUIPMENT LOCATION AND AT LOCATIONS OF ALL POWER PRODUCTION SOURCES.
9. LABELS WILL BE APPLIED IN ACCORDANCE WITH THE NEC. SOME LABELS SHOWN MAY NOT BE NECESSARY.

WIRING NOTES:

1. CONDUCTORS SHALL BE COPPER OR ALUMINUM, RATED AT NOT LESS THAN 600 VOLTS
2. MINIMUM SIZE SHALL BE #14 AWG UNLESS OTHERWISE NOTED ON THE DRAWINGS.
3. EXPOSED WIRING CONDUCTOR INSULATION SHALL BE TYPE PV WIRE, USE-2, OR RHW-2 WHERE THE OUTER LAYER OF THE INSULATION IS UV, SUNLIGHT, AND MOISTURE RESISTANT. CABLE ASSEMBLIES SHALL BE TYPE DG. BARE CONDUCTORS SHALL BE A MINIMUM OF #6 AWG.
4. EXTERIOR WIRING CONDUCTOR INSULATION SHALL BE TYPE THWN-2 AND INSTALLED IN ELECTRICAL METALLIC TUBING(EMT), RIGID POLYVINYL CHLORIDE CONDUIT(PVC), RIGID METALLIC CONDUIT (RMC), LIQUIDTIGHT FLEXIBLE METALLIC CONDUIT (LFMC), OR LIQUIDTIGHT FLEXIBLE NON METALLIX CONDUIT (LFNC). SE-TYPE CABLE CAN BE USED AS AN ALTERNATIVE. ADDITIONAL WIRING METHODS SHALL BE PERMITTED ONLY WHEN IN COMPLIANCE WITH ALL NEC REQUIREMENTS.
5. INTERIOR WIRING CONDUCTOR INSULATION SHALL BE TYPE THWN-2 OR XHHW AND INSTALLED IN ELECTRICAL METALLIC TUBING (EMT), FLEXIBLE METAL CONDUIT(FMC), LIQUIDTIGHT FLEXIBLE METAL CONDUIT (LFMC), LIQUIDTIGHT FLEXIBLE NONMETALLIC CONDUIT (LFNC). TYPE SE, NM, AND MC CABLE ASSEMBLIES SHALL ALSO BE PERMITTED. ADDITIONAL WIRING METHODS SHALL BE PERMITTED ONLY WHEN IN COMPLIANCE WITH ALL NEC REQUIREMENTS.
6. BURIED WIRING CONDUCTOR INSULATION SHALL BE RATED FOR DIRECT BURIAL WHEN INSTALLED OUTSIDE OF RACEWAY. CONDUCTOR INSULATION SHALL BE TYPE THWN-2 OR XHHW AND INSTALLED IN RIGID PVC, RIGID METALLIC CONDUIT, OR HDPE. ADDITIONAL WIRING METHODS SHALL BE PERMITTED ONLY WHEN IN COMPLIANCE WITH ALL NEC REQUIREMENTS.
7. USE SCHEDULE 40 PVC OUTDOORS WHERE NOT SUBJECT TO PHYSICAL DAMAGE OR BELOW FLOOR SLAB. USE SCHEDULE 80 PVC OUTDOORS WHERE SUBJECT TO PHYSICAL DAMAGE
8. MINIMUM CONDUIT SIZE TO BE 1/2".
9. WIRING METHODS TO CONFORM TO CHAPTER 3 OF THE NEC.

CONSTRUCTION NOTES:

1. ALL WORK IS TO BE PERFORMED IN ACCORDANCE WITH THE NEC, STATE, AND LOCAL APPLICABLE CODES.
2. FOLLOW MANUFACTURER'S INSTALLATION INSTRUCTIONS, BEST PRACTICES, AND SPECIFICATIONS.
3. ENSURE REQUIRED MAINTENANCE ACCESS AND CLEARANCES ARE
4. FUSES 0 - 600 AMPS SHALL BE UL CLASS "RK-1" LOW PEAK DUAL ELEMENT TIME DELAY WITH 200,000 AMPERE INTERRUPTING RATING A, UNLESS NOTED OTHERWISE.
5. ALL TERMINALS, SPLICING CONNECTORS, LUGS, ETC SHALL BE IDENTIFIED FOR USE WITH THE MATERIAL (CU/AL) OF THE CONDUCTOR AND SHALL BE PROPERLY INSTALLED.
6. ALL PENETRATIONS THROUGH EXTERIOR ROOFS SHALL BE FLASHED IN A WATERPROOF MANNER.
7. ALL PENETRATIONS THROUGH ATTIC FIRE BARRIERS SHALL BE SEALED WITH FIRE-BARRIER SEALANT CAULK.
8. SUPPORT ALL CONDUIT AND EQUIPMENT IN ACCORDANCE W/ NEC. ANY SUSPENDED MATERIALS SHALL BE DIRECTLY SUPPORTED BY THE BUILDING STRUCTURE.
9. A NORTH CAROLINA REGISTERED DESIGN PROFESSIONAL WILL BE REQUIRED TO SEAL THE STRUCTURAL DESIGN AT THE TIME OF PERMIT APPLICATION IF ANY OF THE FOLLOWING EXIST AND ARE ATTESTED TO BY THE APPLICANT:
   -THE WEIGHT OF THE PV SYSTEM EXCEEDS THREE (3) POUNDS PER SQUARE FOOT(PSF)
   -THE ROOF POSSESSES MORE THAN ONE (1) LAYER OF ASPHALT SHINGLES
   -THE ROOFING MATERIAL CONSISTS OF A TYPE OTHER THAN ASPHALT SHINGLES OR METAL
   -THE ROOF IS LOCATED IN A 140 MPH OR GREATER WIND ZONE

NC SOLAR NOW

CLIENT INFO

PHYLLIS THOMAS
702 GIMGHOUL ROAD
CHAPEL HILL, NC 27514

PROJECT INFO

DC INPUT:	9.200 kW
AC OUTPUT:	23.000 kW
DOI INSPT. METHOD:	OPTION 2

Model Energy
300 Fayetteville St.
#1430
Raleigh, NC 27602
919-274-9905
ModelEnergy.com
P-1194

NORTH CAROLINA PROFESSIONAL SEAL 035699 ENGINEER ANDREW W. KING
08-08-2025

CODE REFERENCES

NATIONAL ELECTRICAL CODE v. 2017
NC FIRE PROTECTION CODE v. 2018
NC BUILDING CODE v. 2018
NC RESIDENTIAL CODE v. 2018
ACSE v. 7-10

SITE CONDITIONS

WIND SPEED:	120 MPH
RISK CATEGORY:	II
EXPOSURE:	B
SNOW:	15 PSF

SHEET INDEX

PV-1: COVER SHEET
PV-2: PV STRUCTURAL
PV-3: PV ELECTRICAL
PV-4: PV EQUIPMENT LABELS
PV-5: PV INSTALL GUIDE

VERSIONS

FOR:	DESIGNER	DATE
CONSTRUCTION	CRM	8/7/2025

PV SYSTEM EQUIPMENT LABELS

PV-4.1

© 2025 NC SOLAR NOW EXPRESSLY RESERVES ITS COMMON LAW COPYRIGHT AND OTHER PROPERTY RIGHTS IN THESE PLANS. THESE PLANS ARE NOT TO BE REPRODUCED, CHANGED OR COPIED IN ANY FORM OR MANNER WHATSOEVER, NOR ARE THEY TO BE ASSIGNED TO ANY THIRD PARTY WITHOUT FIRST OBTAINING THE EXPRESSED WRITTEN PERMISSION AND CONSENT OF NC SOLAR NOW.

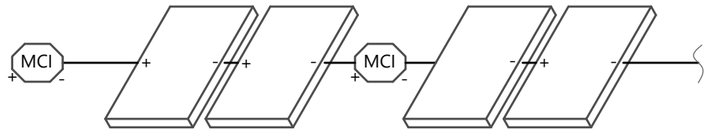

2 STRING WIRING + MCI DETAIL
NOT TO SCALE

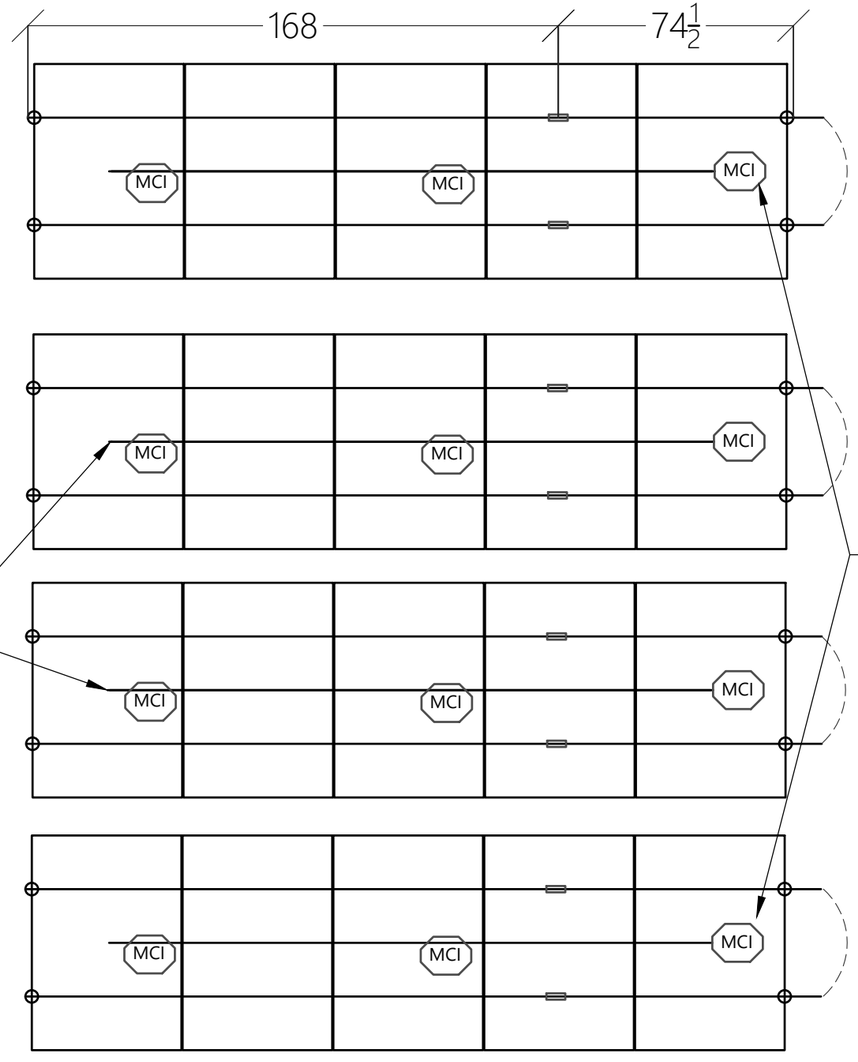

1 ARRAY LAYOUT DETAIL
NOT TO SCALE

NC SOLAR NOW

CLIENT INFO

PHYLLIS THOMAS
702 GIMGHOUL ROAD
CHAPEL HILL, NC 27514

PROJECT INFO

DC INPUT:	9.200 kW
AC OUTPUT:	23.000 kW
DOI INSPT. METHOD:	OPTION 2

Model Energy
300 Fayetteville St.
#1430
Raleigh, NC 27602
919-274-9905
ModelEnergy.com
P-1194

NORTH CAROLINA PROFESSIONAL SEAL 035699 ENGINEER ANDREW W. KING
08-08-2025

CODE REFERENCES

NATIONAL ELECTRICAL CODE v. 2017
NC FIRE PROTECTION CODE v. 2018
NC BUILDING CODE v. 2018
NC RESIDENTIAL CODE v. 2018
ACSE v. 7-10

SITE CONDITIONS

WIND SPEED:	120 MPH
RISK CATEGORY:	II
EXPOSURE:	B
SNOW:	15 PSF

SHEET INDEX

PV-1: COVER SHEET
PV-2: PV STRUCTURAL
PV-3: PV ELECTRICAL
PV-4: PV EQUIPMENT LABELS
PV-5: PV INSTALL GUIDE

VERSIONS

FOR:	DESIGNER	DATE
CONSTRUCTION	CRM	8/7/2025

PV SYSTEM INSTALL GUIDE

PV-5.1

S-5!®

The Right Way!®

S-5-S and S-5-S Mini

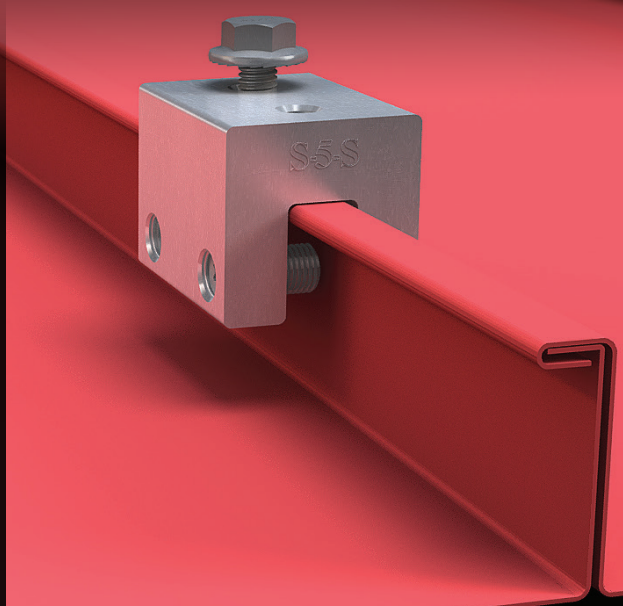

S-5-S Clamp

The S-5-S clamp was created specifically for popular snap-together profiles—including residential profiles by Taylor Metals and Easy Lock Standing Seam. For horizontal seams under .540 inches (like the Firestone UC4) the S-5-S or S-5-S Mini can be used to avoid the necessity of crimping the seam.

Its simple design and size make it perfect for use with S-5!® snow retention products and other heavy-duty applications. Installation is as simple as setting the patented round-point setscrews into the clamp, placing the clamp on the seam, and tightening them to the specified tension. Then, affix ancillary items using the bolt provided with the product. Go to www.S-5.com/tools for information and tools available for properly attaching and tensioning S-5! clamps.

S-5-S Mini Clamp

The S-5-S Mini is a bit shorter than the S-5-S and has one setscrew rather than two. The mini is the choice for attaching all kinds of rooftop accessories: signs, walkways, satellite dishes, antennas, rooftop lighting, lightning protection systems, solar arrays, exhaust stack bracing, conduit, condensate lines, mechanical equipment—just about anything!*

*S-5! mini clamps are not compatible with, and should not be used with S-5! SnoRail™/SnoFence™ or ColorGard® snow retention systems.

The S-5-S clamp was created specifically for popular snap-together profiles.

The right way to attach almost anything to metal roofs!

888-825-3432 | www.S-5.com

S-5!®
The Right Way!®

The strength of the S-5-S clamp is in its simple design. The patented setscrews will slightly dimple the metal seam material but not pierce it—leaving roof warranties intact.

The **S-5-S** and **S-5-S Mini** clamps are each furnished with the hardware shown to the right. Each box also includes a bit tip for tightening setscrews using an electric screw gun. A structural aluminum attachment clamp, the S-5-S is compatible with most common metal roofing materials excluding copper. All included hardware is stainless steel. Please visit **www.S-5.com** for more information including CAD details, metallurgical compatibilities and specifications.

The S-5-S clamp has been tested for load-to-failure results on most major brands and profiles of standing seam roofing. The independent lab test data found at www.S-5.com can be used for load-critical designs and applications. S-5!® holding strength is unmatched in the industry. Profiles that are shaped as illustrated below will work with the S-5-S and S-5-S Mini. In order for the S-5-S or S-5-S Mini to fit these types of seams, the finished seam must:

- Be at least 1.00" high.
- Have a height distance less than or equal to 0.25" between the male portion of the panel and female portion of the panel.

Example Profiles

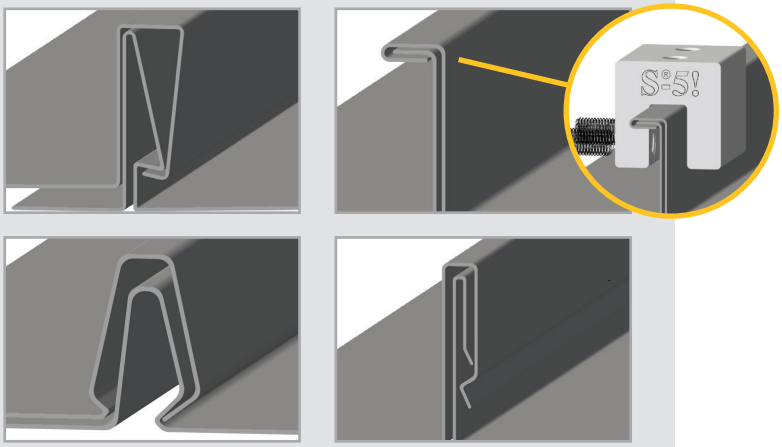

S-5-S Clamp

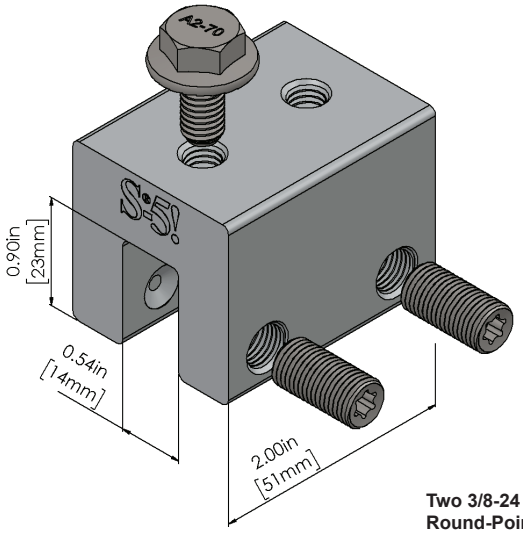

S-5-S Mini Clamp

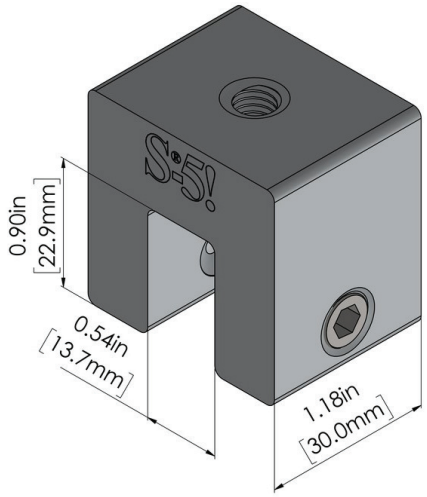

Please note: All measurements are rounded to the second decimal place.

S-5!® Warning! Please use this product responsibly!

Products are protected by multiple U.S. and foreign patents. Visit the website at www.S-5.com for complete information on patents and trademarks. For maximum holding strength, setscrews should be tensioned and re-tensioned as the seam material compresses. Clamp setscrew tension should be verified using a calibrated torque wrench between 160 and 180 inch pounds when used on 22ga steel, and between 130 and 150 inch pounds for all other metals and thinner gauges of steel. Consult the S-5! website at www.S-5.com for published data regarding holding strength.

Copyright 2021 Metal Roof Innovations, Ltd. S-5! products are patent protected.
S-5! aggressively protects its patents, trademarks and copyrights. Version 081721.

Distributed by

Datasheet

IRONRIDGE

Flush Mount System

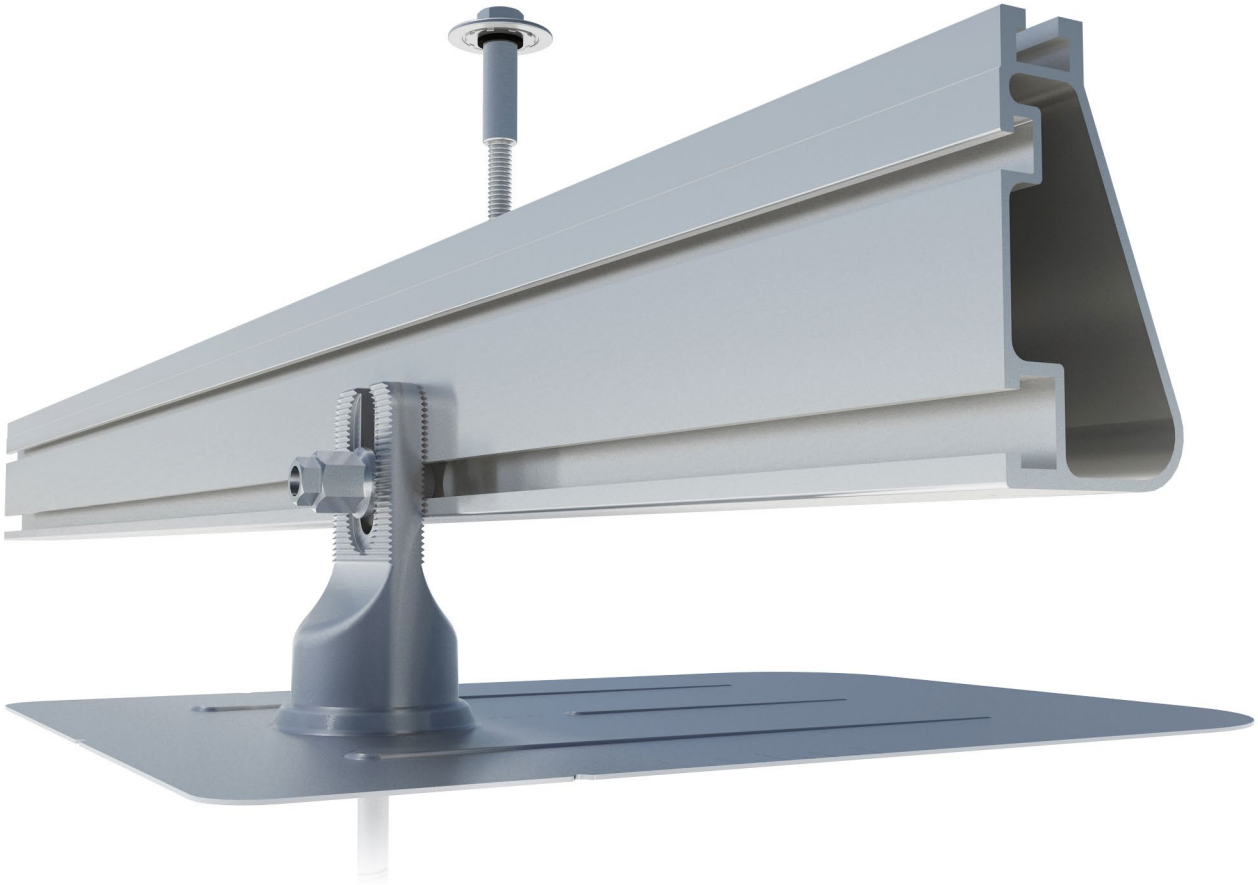

Built for solar's toughest roofs.

IronRidge builds the strongest mounting system for pitched roofs in solar. Every component has been tested to the limit and proven in extreme environments.

Our rigorous approach has led to unique structural features, such as curved rails and reinforced flashings, and is also why our products are fully certified, code compliant and backed by a 20-year warranty.

Strength Tested

All components evaluated for superior structural performance.

PE Certified

Pre-stamped engineering letters available in most states.

Class A Fire Rating

Certified to maintain the fire resistance rating of the existing roof.

Design Assistant

Online software makes it simple to create, share, and price projects.

UL 2703 Listed System

Entire system and components meet newest effective UL 2703 standard.

25-Year Warranty

Products guaranteed to be free of impairing defects.

XR Rails

XR10 Rail



A low-profile mounting rail for regions with light snow.

- 6’ spanning capability
- Moderate load capability
- Clear and black finish

XR100 Rail



The ultimate residential solar mounting rail.

- 8’ spanning capability
- Heavy load capability
- Clear and black finish

XR1000 Rail



A heavyweight mounting rail for commercial projects.

- 12’ spanning capability
- Extreme load capability
- Clear anodized finish

Bonded Splices

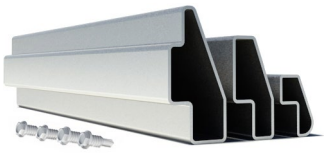

All rails use internal splices for seamless connections.

- Self-drilling screws
- Varying versions for rails
- Forms secure bonding

Clamps & Grounding

UFOs



Universal Fastening Objects bond modules to rails.

- Fully assembled & lubed
- Single, universal size
- Clear and black finish

Stopper Sleeves



Snap onto the UFO to turn into a bonded end clamp.

- Bonds modules to rails
- Sized to match modules
- Clear and black finish

CAMO



Bond modules to rails while staying completely hidden.

- Universal end-cam clamp
- Tool-less installation
- Fully assembled

Grounding Lugs



Connect arrays to equipment ground.

- Low profile
- Single tool installation
- Mounts in any direction

Attachments

FlashFoot2



Flash and mount XR Rails with superior waterproofing.

- Twist-on Cap eases install
- Wind-driven rain tested
- Mill and black finish

Conduit Mount



Flash and mount conduit, strut, or junction boxes.

- Twist-on Cap eases install
- Wind-driven rain tested
- Secures ¾” or 1” conduit

Slotted L-Feet



Drop-in design for rapid rail attachment.

- Secure rail connections
- Slot for vertical adjusting
- Clear and black finish

Bonding Hardware



Bond and attach XR Rails to roof attachments.

- T & Square Bolt options
- Nut uses 7/16” socket
- Assembled and lubricated

Resources

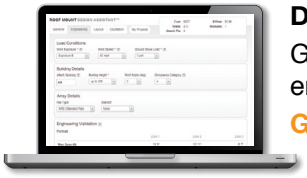

Design Assistant

Go from rough layout to fully engineered system. For free.

Go to IronRidge.com/design

NABCEP Certified Training

Earn free continuing education credits, while learning more about our systems.

Go to IronRidge.com/training

© 2018 IronRidge, Inc. All rights reserved. U.S. Patents: #8,695,290; #9,819,303; #9,865,938; Others Pending. Version 1.60

Powerwall 3

Power Everything

—

Powerwall 3 is a fully integrated solar and battery system, designed to accelerate the transition to sustainable energy. Customers can receive whole home backup, cost savings, and energy independence by producing and consuming their own energy while participating in grid services. Once installed, customers can manage their system using the Tesla App to customize system behavior to meet their energy goals.

Powerwall 3 achieves this by supporting up to 20 kW DC of solar and providing up to 11.5 kW AC of continuous power per unit. It has the ability to start heavy loads rated up to 185 LRA, meaning a single unit can support the power needs of most homes. Powerwall 3 Expansions make it easier and more affordable to scale up customers' systems to meet their current or future needs. Powerwall 3 is designed for fast and efficient installations, modular system expansion, and simple connection to any electrical service.



2024

Powerwall 3 Technical Specifications

System Technical Specifications

Model Number	1707000-xx-y			
Nominal Grid Voltage (Input & Output)	120/240 VAC			
Grid Type	Split phase			
Frequency	60 Hz			
Nominal Battery Energy	13.5 kWh AC[1]			
Nominal Output Power (AC)	5.8 kW	7.6 kW	10 kW	11.5 kW
Maximum Apparent Power	5,800 VA	7,600 VA	10,000 VA	11,500 VA
Maximum Continuous Current	24 A	31.7 A	41.7 A	48 A
Overcurrent Protection Device[2]	30 A	40 A	60 A	60 A
Configurable Maximum Continuous Discharge Power Off-Grid (PV Only, -20°C to 25°C)	15.4 kW[3]			
Maximum Continuous Charge Current / Power (Powerwall 3 only)	20.8 A AC / 5 kW			
Maximum Continuous Charge Current / Power (Powerwall 3 with up to (3) Expansion units)	33.3 A AC / 8 kW			
Output Power Factor Rating	0 – 1 (Grid Code configurable)			
Maximum Output Fault Current (1 s)	160 A			
Maximum Short-Circuit Current Rating	10 kA			
Load Start Capability	185 LRA			
Solar to Battery to Home/Grid Efficiency	89%[1,4]			
Solar to Home/Grid Efficiency	97.5%[5]			
Power Scalability	Up to 4 Powerwall 3 units supported			
Energy Scalability	Up to 3 Expansion units (for a maximum total of 7 units)			
Supported Islanding Devices	Gateway 3, Backup Switch, Backup Gateway 2			
Connectivity	Wi-Fi (2.4 and 5 GHz), Ethernet, Cellular (LTE/4G[6])			
Hardware Interface	Dry contact relay, Rapid Shutdown (RSD) certified switch and 2-pin connector, RS-485 for meters			
AC Metering	Revenue Grade (+/- 0.5%, ANSI C12.20)			
Protections	Integrated arc fault circuit interrupter (AFCI), Isolation Monitor Interrupter (IMI), PV Rapid Shutdown (RSD) using Tesla Mid-Circuit Interrupters			
Customer Interface	Tesla Mobile App			
Warranty	10 years			

[1] Values provided for 25°C (77°F), at beginning of life. 3.3 kW charge/discharge power.

[2] See Powerwall 3 Installation Manual for fuse requirements if using fuse for overcurrent protection.

[3] If enabling the 15.4 kW off-grid maximum continuous discharge power, Powerwall 3 must be installed with an 80 A breaker and appropriately sized conductors.

[4] Typical solar shifting use case.

[5] Tested using CEC weighted efficiency methodology.

[6] The customer is expected to provide internet connectivity for Powerwall 3; cellular should not be used as the primary mode of connectivity. Cellular connectivity subject to network operator service coverage and signal strength.

Powerwall 3 Technical Specifications

Solar Technical Specifications

Maximum Solar STC Input	20 kW
Withstand Voltage	600 V DC
PV DC Input Voltage Range	60 — 550 V DC
PV DC MPPT Voltage Range	60 — 480 V DC
MPPTs	6
Maximum Current per MPPT (I_{mp})	13 A [7]
Maximum Short Circuit Current per MPPT (I_{sc})	15 A [7]

[7] Where the DC input current exceeds the MPPT rating, a jumper can be used to combine two MPPTs into a single input to intake DC current up to 26 A I_{MP} / 30 A I_{SC}.

Environmental Specifications

Operating Temperature	–20°C to 50°C (–4°F to 122°F) [8]
Operating Humidity (RH)	Up to 100%, condensing
Storage Temperature	–20°C to 30°C (–4°F to 86°F), up to 95% RH, non-condensing, State of Energy (SOE): 25% initial
Maximum Elevation	3000 m (9843 ft)
Environment	Indoor and outdoor rated
Enclosure Rating	NEMA 3R
Ingress Rating	IP67 (Battery & Power Electronics) IP55 (Wiring Compartment)
Pollution Rating	PD3
Operating Noise @ 1 m	< 50 db(A) typical < 62 db(A) maximum

[8] Performance may be de-rated at operating temperatures above 40°C (104°F).

Compliance Information

Certifications	UL 1741, UL 9540, UL 9540A, UL 3741, UL 1741 PCS, UL 1741 SA, UL 1741 SB, UL 1973, UL 1699B, UL 1998, CSA C22.2 No. 0.8, CSA C22.2 No. 107.1, CSA C22.2 No. 330, CSA 22.3 No. 9, IEEE 1547, IEEE 1547A, IEEE 1547.1, CA Rule No.21
Grid Connection	United States and Canada
Emissions	FCC Part 15 Class B, ICES 003
Environmental	RoHS Directive 2011/65/EU
Seismic	AC156, IEEE 693-2005 (high)
Fire Testing	Meets the unit level performance criteria of UL 9540A

Powerwall 3 Technical Specifications

Mechanical Specifications

Dimensions	1105 x 609 x 193 mm (43.5 x 24 x 7.6 in) [9]
Total Weight of Installed Unit	132 kg (291.2 lb)
Weight of Powerwall 3	124 kg (272.5 lb)
Weight of Glass Front Cover	6.5 kg (14.5 lb)
Weight of Wall Bracket	1.9 kg (4.2 lb)
Mounting Options	Floor or wall mount

[9] These dimensions include the glass front cover being installed on Powerwall 3.

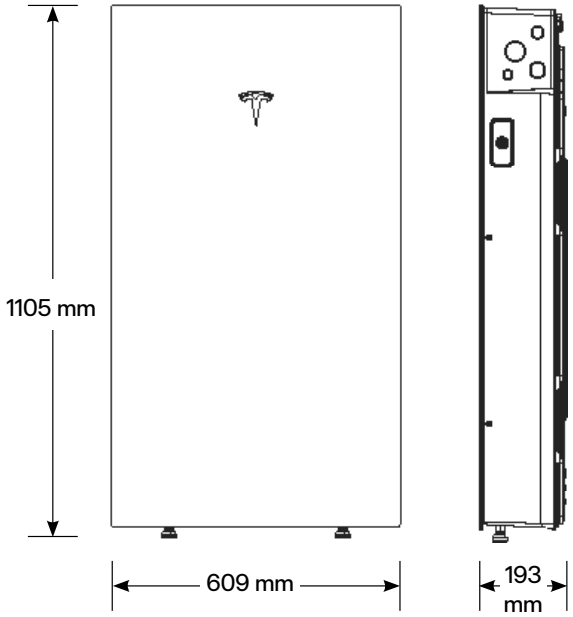

Powerwall 3 Expansion Technical Specifications

Battery Technical Specifications

Model Number	1807000-xx-y
Nominal Battery Energy	13.5 kWh
Voltage Range	52 - 92 V DC [10]

[10] Powerwall 3 Expansion units are connected in parallel and are not field serviceable.

Environmental Specifications

Operating Temperature	–20°C to 50°C (–4°F to 122°F) [11]
Operating Humidity (RH)	Up to 100%, condensing
Storage Temperature	–20°C to 30°C (–4°F to 86°F), up to 95% RH, non-condensing, State of Energy (SOE): 25% initial
Maximum Elevation	3000 m (9843 ft)
Environment	Indoor and outdoor rated
Enclosure Rating	NEMA 3R
Ingress Rating	IP67
Pollution Rating	PD3

[11] Performance may be de-rated at operating temperatures above 40°C (104°F).

Compliance Information

Certifications	UL 1973, UL 9540

Mechanical Specifications

Dimensions	1105 x 609 x 168 mm (43.5 x 24 x 6.6 in) [12]
Total Weight of Wall-Mounted Expansion Unit	118.5 kg (261.2 lb)
Weight of Expansion Unit	110 kg (242.5 lb)
Weight of Glass Front Cover	6.5 kg (14.5 lb)
Weight of Wall Bracket	1.9 kg (4.2 lb)
Weight of Expansion Accessories	0.7 kg (1.5 lb)
Mounting Options	Floor or wall mount
Stacking Capability (Floor Mount Only)	Up to (3) Expansion units behind a Powerwall 3
Compatibility with Other Systems	Only compatible with Powerwall 3
Connection to Powerwall 3 or Expansions	Powerwall 3 Expansion harness [13]

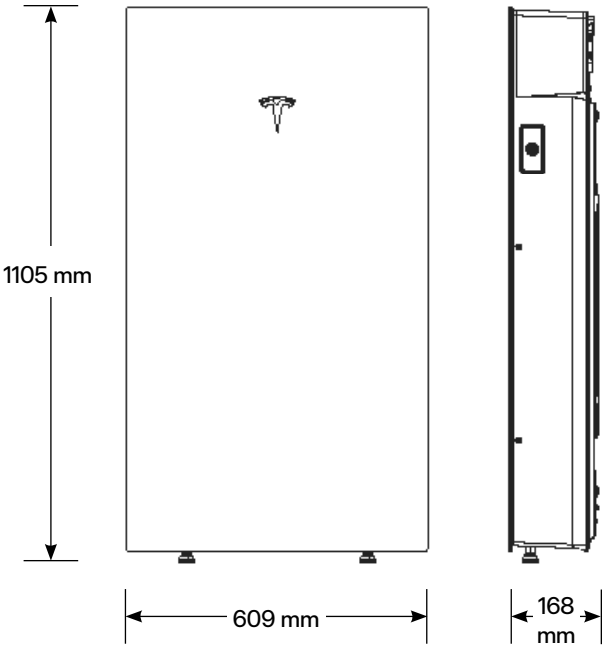

[12] These dimensions include the glass front cover being installed on Powerwall 3 Expansion.

[13] The Powerwall 3 Expansion harness is a listed component of the UL 9540 certification.

Solar Shutdown Device Technical Specifications

The Solar Shutdown Device is a Mid-Circuit Interrupter (MCI) and is integral to the rapid shutdown (RSD) function required for rooftop PV systems in accordance with Article 690 of the NEC. When paired with Powerwall 3, solar array shutdown is initiated by an External System Shutdown Switch or the On/Off Enable switch located on Powerwall 3. Systems not subject to rapid shutdown requirements must still install one or more MCIs for functional purposes; see the Powerwall 3 installation manual for details.

Electrical Specifications

Model	MCI-1	MCI-2	MCI-2 High Current
Nominal Input DC Current Rating (I_{MP})	13 A	13 A	15 A
Maximum Input Short Circuit Current (I_{SC})	19 A	17 A	19 A
Maximum System Voltage	600 V DC	1000 V DC[14]	1000 V DC[14]
Maximum Disconnect Voltage[15]	600 V DC	165 V DC	165 V DC

[14] Maximum System Voltage is limited by Powerwall to 600 V DC.

[15] Maximum Disconnect Voltage is the maximum voltage allowed across each MCI in the open position (Rapid Shutdown Initiated). An individual MCI-2 has a voltage rating of 165V but in combination (connected in the same string) their voltage ratings are additive.

RSD Module Performance

Maximum Number of Devices per String	5
Control	Power Line Excitation
Passive State	Normally Open
Maximum Power Consumption	7 W
Warranty	25 years

Environmental Specifications

Operating Temperature	-40°C to 50°C (-40°F to 122°F)	-45°C to 70°C (-49°F to 158°F)
Storage Temperature	–30°C to 70°C (–22°F to 158°F)	–30°C to 70°C (–22°F to 158°F)
Enclosure Rating	NEMA 4X / IP65	

Mechanical Specifications

Electrical Connections	MC4 Connector	
Housing	Plastic	
Dimensions	125 x 150 x 22 mm (5 x 6 x 1 in)	173 x 45 x 22 mm (6.8 x 1.8 x 1 in)
Weight	350 g (0.77 lb)	120 g (0.26 lb)
Mounting Options	ZEP Home Run Clip M4 Screw (#10) M8 Bolt (5/16") Nail / Wood screw	Wire Clip

Compliance Information

Certifications	UL 1741 PVRSE, UL 3741, PVRSA (Photovoltaic Rapid Shutdown Array)
RSD Initiation Method	External System Shutdown Switch or Powerwall 3 Enable Switch

UL 3741 PV Hazard Control (and PVRSA) Compatibility

See UL 3741 Application Addendum

Gateway 3

—

Tesla Gateway 3 controls connection to the grid in a Powerwall system, automatically detecting outages and providing seamless transition to backup power. It provides energy monitoring that is used by Powerwall for solar self-consumption, time-based control, and backup operation.

Performance Specifications

Model Number	1841000-x1-y
Nominal Grid Voltage	120/240 V AC
Grid Configuration	Split phase
Grid Frequency	60 Hz
Continuous Current Rating	200 A
Maximum Supply Short Circuit Current	22 kA with Square D or Eaton main breaker 25 kA with Eaton main breaker [16]
IEC Protective Class	Class I
Overvoltage Category	Category IV

[16] Only Eaton CSR or BWH main breakers are 25 kA rated.

AC Meter	+/- 0.5%
Communication	CAN
User Interface	Tesla App
Backup Transition	Automatic disconnect for seamless backup
Overcurrent Protection Device	100–200 A Service entrance rated Eaton CSR, BWH, or BW, or Square D QOM breakers
Internal Panelboard	200 A 8-space/16 circuit breakers Eaton BR, Siemens QP, or Square D HOM breakers rated to 10–125A
Warranty	10 years

Environmental Specifications

Operating Temperature	–20°C to 50°C (–4°F to 122°F)
Operating Humidity (RH)	Up to 100%, condensing
Maximum Elevation	3000 m (9843 ft)
Environment	Indoor and outdoor rated
Enclosure Type	NEMA 3R

Compliance Information

Certifications	UL 67, UL 869A, UL 916, UL 1741 PCS, CSA 22.2 107.1, CSA 22.2 29
Emissions	FCC Part 15, Class B, ICES 003

Mechanical Specifications

Dimensions	660 x 411 x 149 mm (26 x 16 x 6 in)
Weight	16.3 kg (36 lb)
Mounting options	Wall mount

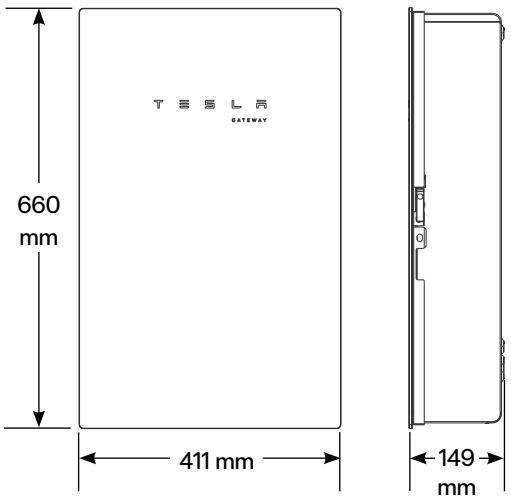

Powerwall 3 Example System Configurations

Powerwall 3 with Gateway 3

Whole Home Backup

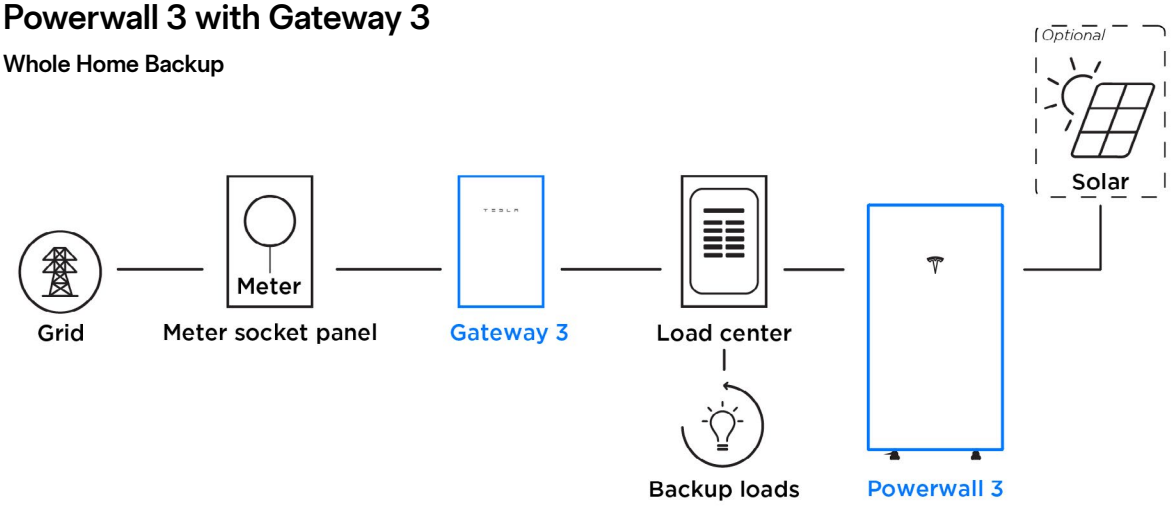

Powerwall 3 with Backup Switch

Whole Home Backup

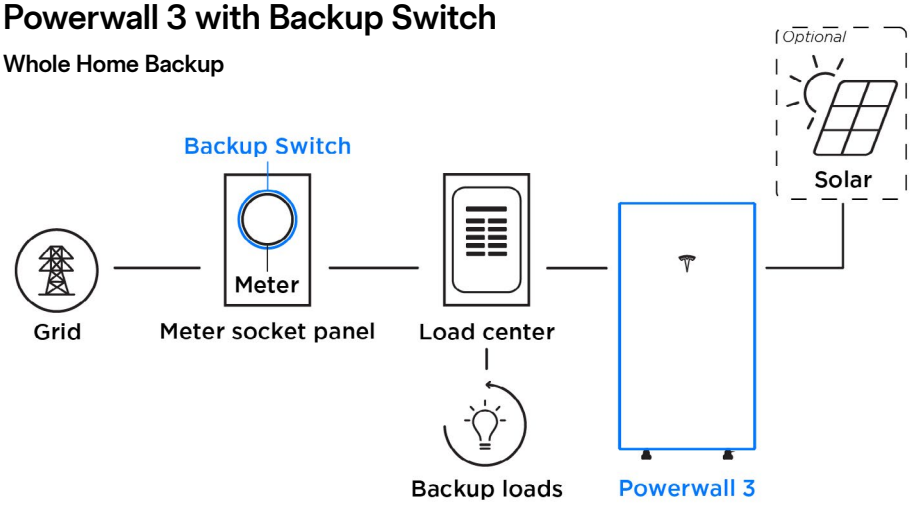

Powerwall 3 with Backup Gateway 2

Partial Home Backup

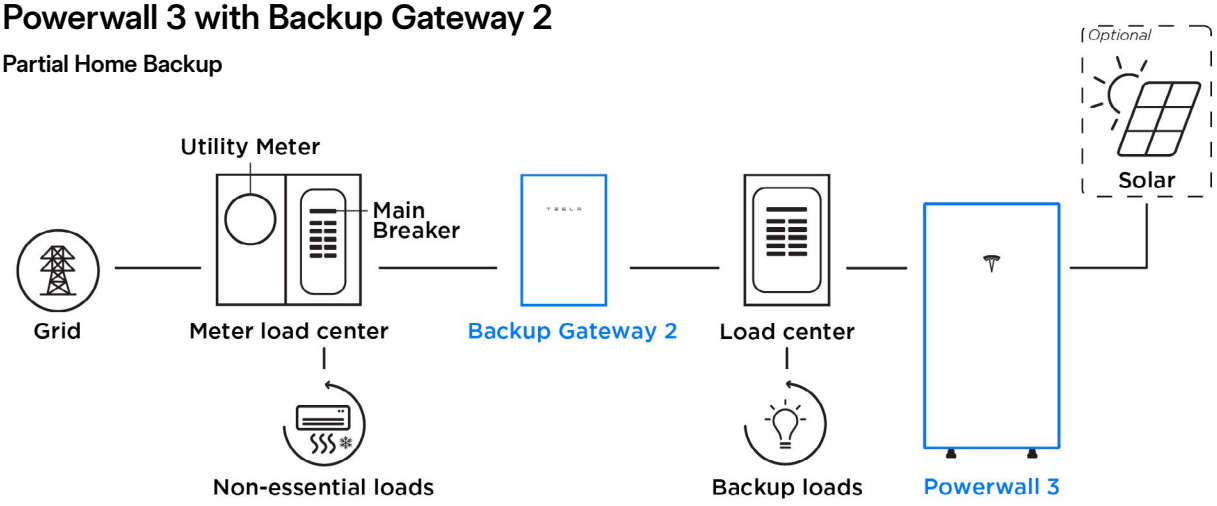

Powerwall 3 Example System Configurations

Powerwall 3 with Gateway 3

(1) Powerwall 3 with (3) Expansion Units

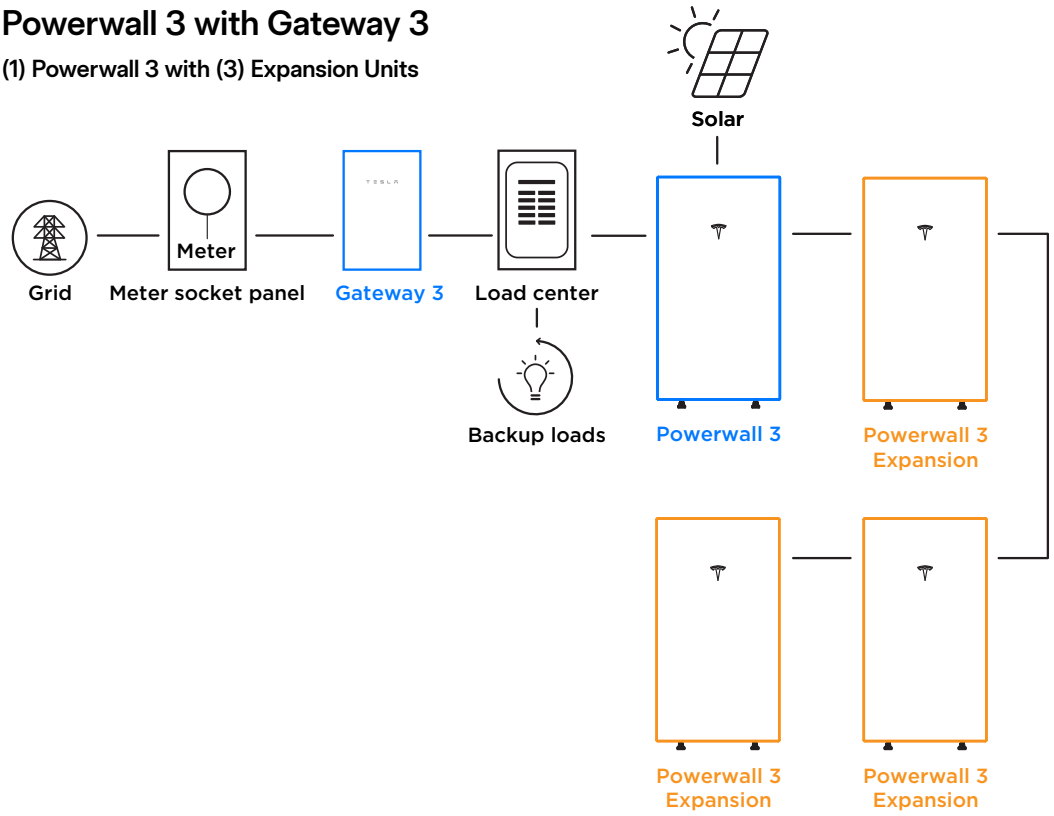

Powerwall 3 with Backup Switch

(4) Powerwall 3 Units with (3) Expansion Units (Maximum System Size)

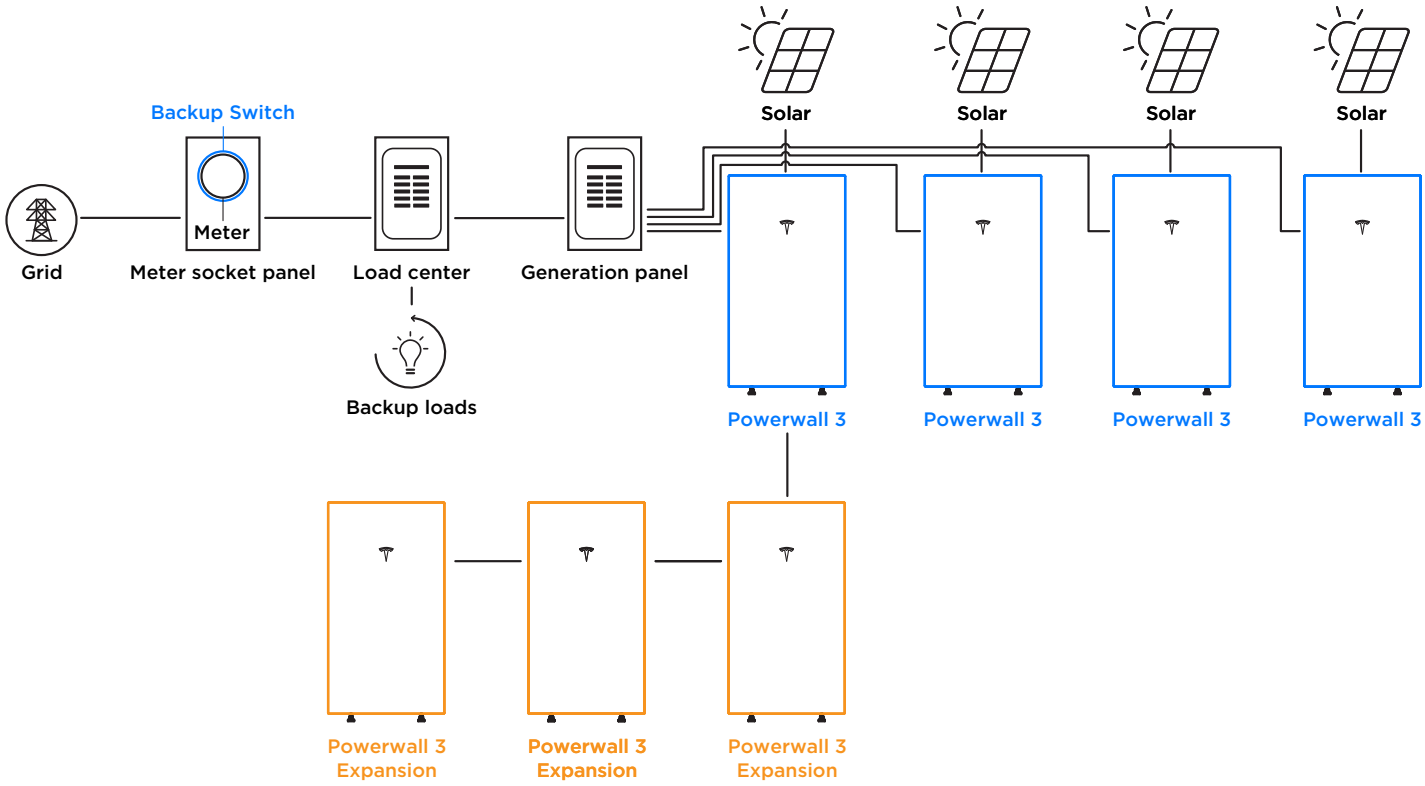

SOLAR'S MOST TRUSTED

REC

REC ALPHA® PURE-RX SERIES

DATASHEET



9 A MODULE CURRENT COMPATIBLE WITH MLPE

450 - 470W
HETEROJUNCTION TECHNOLOGY

22.6%	EFFICIENCY
>92%	POWER IN YEAR 25
-0.24%/K	TEMPERATURE COEFFICIENT OF P_{MAX}

PRODUCT · REC 25 YEAR ProTrust WARRANTY · PERFORMANCE · LABOR

ELIGIBLE

REC ALPHA® PURE-RX SERIES
DATASHEET

REC
SOLAR'S MOST TRUSTED

Measurements in [inches] and mm

GENERAL DATA

Cell Type	88 half-cut bifacial REC heterojunction cells, with gapless technology
Glass	0.13 in solar glass with anti-reflective surface treatment in accordance with EN12150
Backsheet	Highly resistant polymer (Black)
Frame	Anodized aluminum (Black)
Junction Box	4-part, 4 bypass diodes, IP68 rated, in accordance with IEC 62790:2020
Connectors	Stäubli MC4 PV-KBT4/KST4 (12 AWG) in accordance with IEC 62852:2014, IP68 only when connected
Cable	12 AWG solar cable, 66.9 in (1.70 m) + 66.9 in (1.70 m) in accordance with EN50618:2014
Dimensions	68.0 x 47.4 x 1.2 in (22.4 ft²) / 1728 x 1205 x 30 mm (2.08 m²)
Weight	50.0 lb / 22.7 kg
Origin	Made in Singapore

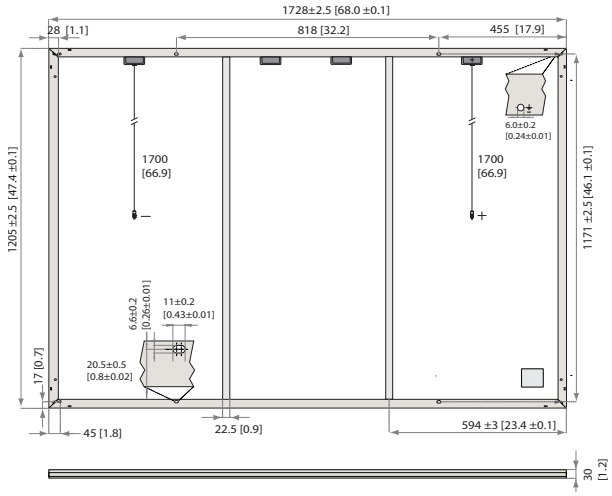

Specifications subject to change without notice.

ELECTRICAL DATA

PRODUCT CODE*: RECXXXAA PURE-RX

STC			
Power Output - P_{MAX} (WP)	450	460	470
Watt Class Sorting - (W)	0/+10	0/+10	0/+10
Nominal Power Voltage - V_{MPP} (V)	54.3	54.9	55.4
Nominal Power Current - I_{MPP} (A)	8.29	8.38	8.49
Open Circuit Voltage - V_{OC} (V)	65.6	65.8	65.9
Short Circuit Current - I_{SC} (A)	8.81	8.88	8.95
Power Density (W/ft²)	20.1	20.5	21.0
Panel Efficiency (%)	21.6	22.1	22.6
NMOT			
Power Output - P_{MAX} (W_P)	343	350	358
Nominal Power Voltage - V_{MPP} (V)	51.2	51.7	52.2
Nominal Power Current - I_{MPP} (A)	6.70	6.77	6.86
Open Circuit Voltage - V_{OC} (V)	61.8	62.0	62.1

Values at standard test conditions (STC: air mass AM 1.5, irradiance 1000 W/m², temperature 25°C), based on a production spread with a tolerance of P_{MAX}, V_{OC} & I_{SC}: ±3% within one watt class. Nominal module operating temperature (NMOT: air mass AM 1.5, irradiance 800 W/m², temperature 20°C, windspeed 1 m/s). *Where xxx indicates the nominal power class (P_{MAX}) at STC above.

MODULE RATINGS

Module Operating Temperature $[T98]_S$	158°F (70°C)
Min. Environmental Temperature	-40°F (-40°C)
System Voltage	1000 V
Maximum Test Load (4 Point Mounting, Front)*	+7000 Pa (1.02 lbs/in²)
Maximum Test Load (4 Point Mounting, Rear)*	-4000 Pa (0.58 lbs/in²)
Maximum Test Load (6 Point Mounting, Front)**	+8000 Pa (1.16 lbs/in²)
Maximum Test Load (6 Point Mounting, Rear)**	-6000 Pa (0.87 lbs/in²)
Max Series Fuse Rating	25 A
Max Reverse Current	25 A

Design load = Test load / 1.5 (safety factor)
§ 98th percentile operating temperature
* IEC61730/UL61730 certified. Refer to installation manual.
**Internal testing. Refer to installation manual.

TEMPERATURE RATINGS*

Nominal Module Operating Temperature	44 ± 2°C
Temperature coefficient of P_{MAX}	-0.24%/K
Temperature coefficient of V_{OC}	-0.24%/K
Temperature coefficient of I_{SC}	0.04%/K

*The temperature coefficients stated are linear values

DELIVERY INFORMATION

Panels per Pallet	33
Panels per 40 ft GP/high cube container	594 (18 Pallets)
Panels per 53 ft truck	792 (24 Pallets)

CERTIFICATIONS

ISO 14001; ISO9001; IEC45001; IEC62941	
IEC 61215:2021;IEC 61730:2023;UL 61730	
ISO 11925-2	Ignitability (EN 13501-1 Class E)
IEC 62716	Ammonia Resistance
IEC 61701	Salt Mist (SM6)
IEC 61215:2016	Hailstone (35mm)
UL 61730	Fire Type 2

WARRANTY

	Standard	REC ProTrust	
Installed by an REC Certified Professional	No	Yes	Yes
System Size	All	<25 kW	25-500 kW
Product Warranty (yrs)	20	25	25
Power Warranty (yrs)	25	25	25
Labor Warranty (yrs)	0	25	10
Power in Year 1	98%	98%	98%
Annual Degradation	0.25%	0.25%	0.25%
Power in Year 25	92%	92%	92%

REC ProTrust Warranty applies only for i) REC panels installed by an REC Certified Solar Professional, and ii) panels have been registered by the installer with REC. Subject to System Size and further conditions. See www.recgroup.com for details.

LOW LIGHT BEHAVIOR

Typical low irradiance performance of module at STC:

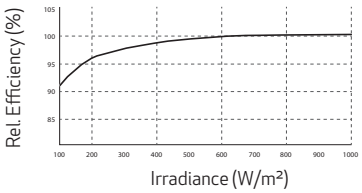

Available from:

Founded in 1996, REC Group is an international pioneering solar energy company dedicated to empowering consumers with clean, affordable solar power. As Solar's Most Trusted, REC is committed to high quality, innovation, and a low carbon footprint in the solar materials and solar panels it manufactures. Headquartered in Norway with operational headquarters in Singapore, REC also has regional hubs in North America, Europe, and Asia-Pacific.

REC Solar PTE. LTD.
20 Tuas South Ave. 14
Singapore 637312
post@recgroup.com
www.recgroup.com

REC

REF: PM-DS-12-06-REV-4.3/B ULEN12.2024

RSTC Enterprises, Inc.
2214 Heimstead Road
Eau Claire, WI 54703
715-830-9997

SOLADECK
FLASHED PV ROOF-MOUNT COMBINER/ENCLOSURES

Outdoor Photovoltaic Enclosures

0799 Series

Composition/Cedar Roof System

ETL listed and labeled

Report # 3171411PRT-002 Revised May, 2018

- UL50 Type 3R, 11 Edition Electrical equipment enclosures
- CSA C22.2 No. 290 Nema Type 3R
- Conforms to UL 1741 Standard

0799 Series Includes:

0799 - 2	Wire size 2/0-14
0799 - 5	Wire size 14-6
0799 - D	Wire size 14-8

Models available in Grey, Black or Stainless Steel


SolaDeck 0799-2S


SolaDeck 0799-5G


SolaDeck 0799-DG

Basic Specifications

Material options:
- Powder coated, 18 gauge galvanized 90 steel (1,100 hours salt spray)
- Stainless steel

Process - Seamless draw (stamped)
Flashing - 15.25” x 17.25”
Height - 3”
Cavity - 255 Cubic inches

Base Plate:

- Fastened to base using toggle fastening system
- 5 roof deck knockouts
- Knockout sizes: (3) .5”, (1) .75” and (1) 1”
- 8”, 35mm slotted din rail
- Ground Block

Passthrough and combiner kits are available for either AC or DC applications.

Product specifications

Eaton BRP20B200R

Catalog Number: BRP20B200R

Eaton BR main breaker loadcenter,200A,X5,Aluminum,Cover included,NEMA 3R,Metallic,10 kAIC,BR,40 circuits,Single pole,20 spaces,Three-wire,Single-phase

General specifications

Product Name	**Catalog Number**
Eaton BR main breaker loadcenter	BRP20B200R
UPC	**Product Length/Depth**
786689059255	29 in
Product Height	**Product Width**
5.5 in	14.31 in
Product Weight	**Warranty**
19 lb	10 year

Certifications

UL 67 UL 50

Product specifications

Number of spaces
20

Interrupt rating
25 kAIC

Phase
Single-phase

Bus material
Aluminum

Main circuit breaker
CSR

Enclosure
NEMA 3R

Amperage Rating
200 A

Number Of Poles
Single-pole

Mounting
Combination

Enclosure material
Metallic

Type
Plug-on neutral main circuit breaker loadcenter

Cover
Cover included

Used with
Type BR 1-inch breakers

NEMA rating
NEMA 3R

Number of wires
3

Number of circuits
40

Voltage rating
120/240 V

Box size

Resources

Brochures
Loadcenters and Circuit Breakers

Specifications and datasheets
Eaton Specification Sheet - BRP20B200R

Eaton Corporation plc
Eaton House
30 Pembroke Road
Dublin 4, Ireland
Eaton.com

© 2023 Eaton. All Rights Reserved.

Eaton is a registered trademark.

All other trademarks are property of their respective owners.

Eaton.com/socialmedia

Product data sheet

Specifications



Safety switch, general duty, non fusible, 60A, 2 pole, 10hp, 240VAC, NEMA 3R, bolt on provision

DU222RB

Product availability : Stock - Normally stocked in distribution facility

Price* : 353.00 USD

Main

Product	Single Throw Safety Switch
Duty Rating	General duty
Device Application	Residential
Disconnect Type	Non-fusible disconnect switch
Factory Installed Neutral	None
Phase	3 phase
Number of Poles	2
Current Rating	60 A
Voltage Rating	240 V AC
Enclosure Rating NEMA	NEMA 3R
Motor power hp	10 hp at 240 V AC 60 Hz for 1 phase motors

Complementary

Mounting Type	Surface
Electrical Connection	Lugs
Wiring configuration	2 wires
Wire Size	AWG 12...AWG 3 aluminium AWG 14...AWG 3 copper
Tightening torque	35 lbf.in (3.95 N.m) 0.00…0.01 in² (2.08…5.26 mm²) (AWG 14...AWG 10) 35 lbf.in (3.95 N.m) (AWG 14...AWG 10) 45 lbf.in (5.08 N.m) 0.01 in² (8.37 mm²) (AWG 8) 45 lbf.in (5.08 N.m) 0.02…0.03 in² (12.3…21.12 mm²) (AWG 6...AWG 4) 50 lbf.in (5.65 N.m) 0.04 in² (26.67 mm²) (AWG 3)
Depth	3.75 in (95.25 mm)
Width	7.75 in (196.85 mm)
Height	9.63 in (244.60 mm)
Net Weight	16.98 lb(US) (7.7 kg)

Environment

Certifications	UL listed file E2875

* Price is “List Price” and may be subject to a trade discount – check with your local distributor or retailer for actual price.

Disclaimer: This documentation is not intended as a substitute for and is not to be used for determining suitability or reliability of these products for specific user applications

Ordering and shipping details

Category	00106-D & DU SW,NEMA3R, 30-200A
Discount Schedule	DE1A
GTIN	785901491491
Returnability	Yes
Country of origin	MX

Packing Units

Unit Type of Package 1	PCE
Number of Units in Package 1	1
Package 1 Height	5.30 in (13.462 cm)
Package 1 Width	7.20 in (18.288 cm)
Package 1 Length	10.00 in (25.4 cm)
Package 1 Weight	4.65 lb(US) (2.109 kg)
Unit Type of Package 2	PAL
Number of Units in Package 2	120
Package 2 Height	36.50 in (92.71 cm)
Package 2 Width	40.00 in (101.6 cm)
Package 2 Length	48.00 in (121.92 cm)
Package 2 Weight	610.00 lb(US) (276.691 kg)
Unit Type of Package 3	CAR
Number of Units in Package 3	5
Package 3 Height	10.70 in (27.178 cm)
Package 3 Width	10.20 in (25.908 cm)
Package 3 Length	23.50 in (59.69 cm)
Package 3 Weight	24.60 lb(US) (11.158 kg)

Offer Sustainability

Sustainable offer status	Green Premium product
California proposition 65	WARNING: This product can expose you to chemicals including: Lead and lead compounds, which is known to the State of California to cause cancer and birth defects or other reproductive harm. For more information go to www.P65Warnings.ca.gov
REACh Regulation	REACh Declaration
REACh free of SVHC	Yes
EU RoHS Directive	Compliant EU RoHS Declaration
Toxic heavy metal free	Yes
Mercury free	Yes
China RoHS Regulation	China RoHS declaration Pro-active China RoHS declaration (out of China RoHS legal scope)
RoHS exemption information	Yes
Environmental Disclosure	Product Environmental Profile
PVC free	Yes

Contractual warranty

Warranty	18 months

Product data sheet DU222RB

Technical Illustration

Dimensions

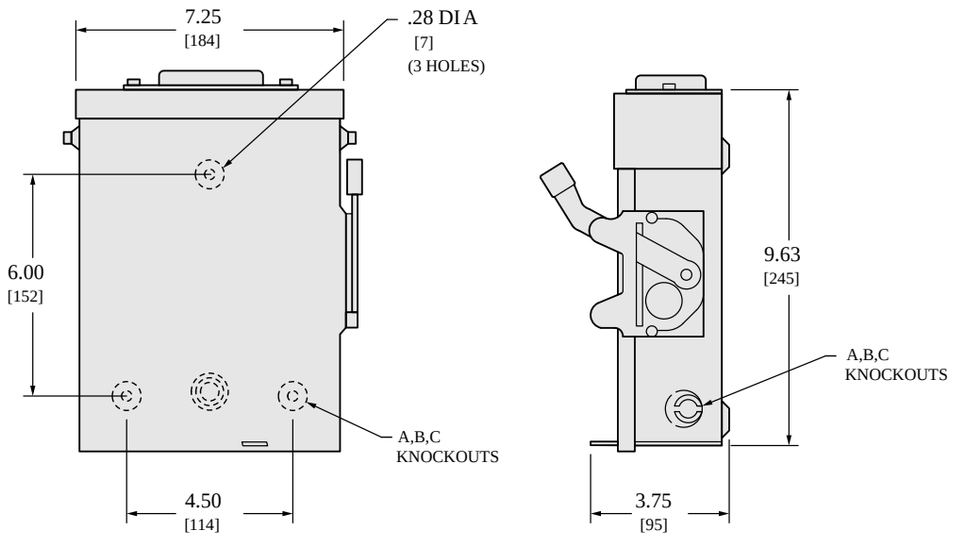

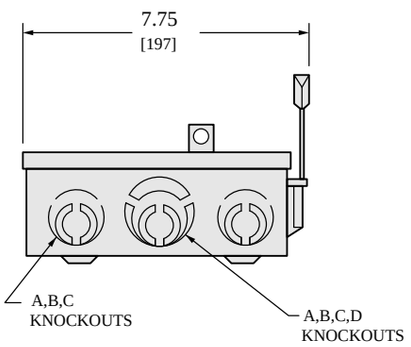

NEMA TYPE 3R

IN.
[mm]

KNOCKOUTS				
SYMBOL	A	B	C	D
CONDUIT SIZE (IN.)	.50	.75	1	1.25

TOP OF NEMA TYPE 3R SWITCHES HAVE PROVISIONS FOR MAXIMUM 2 1/2" BOLT-ON HUB.
ALL DIMENSIONS ARE APPROXIMATE. REFER TO TECHNICAL DRAWINGS AND DOCUMENTATION.

Wiring Diagram

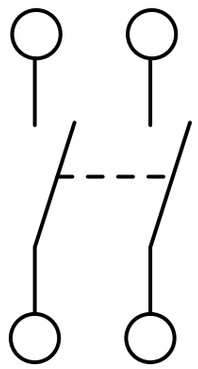

DU222RB

Recommended replacement(s)

Product specifications

Eaton M22-PVT

Catalog Number: M22-PVT

Eaton M22 Modular Twist-to-Release Emergency Stop Operator, 22.5 mm, 35 mm Pushbutton, Twist-to-Release, Button: Red, IP67, IP69K, NEMA 4X, 13, 100,000 Operations, Non-illuminated



General specifications

Product Name
Eaton M22 modular pushbutton

Catalog Number
M22-PVT

UPC
786685271606

Product Length/Depth
2 in

Product Height
1 in

Product Width
2 in

Product Weight
0.1 lb

Warranty
Eaton Selling Policy 25-000, one (1) year from the date of installation of the Product or eighteen (18) months from the date of shipment of the Product, whichever occurs first.

Compliances
CE Marked
Bureau Veritas
GoST-R
CSA

Certifications
CCC Marked
CSA Certified
Lloyd's Register Certified
CSA

Catalog Notes
Includes contact block mounting adapter.

Powering Business Worldwide

defaultTaxonomyAttributeLabel

Type

Emergency Stop

Actuator function

Twist-to-release

Button color

Red

Actuator

35 mm pushbutton

Illumination

Non-illuminated

Series

M22

Environmental rating

IP67, IP69K, NEMA 4X, NEMA 13

Operating cycles

100,000

Size

22.5 mm

Resources

Brochures

M22 Twist-to-Release, Mushroom Head Emergency Stop Buttons

Catalogs

Eaton's Volume 7—Logic Control, Operator Interface and Connectivity Solutions

Installation instructions

M22 Operators and Accessories

Specifications and datasheets

Quick Selector - M22 Pushbuttons

Eaton Specification Sheet - M22-PVT

Global Data Sheet - M22-PVT

Eaton Corporation plc
Eaton House
30 Pembroke Road
Dublin 4, Ireland
Eaton.com

© 2024 Eaton. All Rights Reserved.

Eaton is a registered trademark.

All other trademarks are property of their respective owners.

Eaton.com/socialmedia

Product Selection Guide

SI Series TRUE DC Solar Isolators

How our SI Series TRUE DC Solar Isolator part numbers are configured...

SI | **25** | - | **PEL64R** | - | **2**

Switch Rating

16 Amp	**16**
25 Amp	**25**
32 Amp	**32**
38 Amp	**38**
40 Amp	**40**
55 Amp	**55**
65 Amp	**65**

Number of Poles

2	2-Pole Single String
4S	4-Pole Higher Current Rating
2H	4-Pole Higher Current Rating
4	4-Pole Two Strings
6	6-Pole Three Strings
3H	6-Pole Higher Current Rating
8	8-Pole Four Strings
4H	8-Pole Higher Current Rating

DBL

Modular Switch, Lockable Lever Handle



IP65
NEMA 4

PEL64R

Enclosed Version, Lockable Rotary Handle



IP67
NEMA 4X

Contact IMO for String Box Enclsoure options

All Relevant International Approvals

Meet the range

Technical Data

PLEASE NOTE:
The feasibility of a code number does not guarantee effective availability of a product. Please refer to the table overleaf for available options.

How to select the correct isolator for your needs...

When choosing the appropriate SI Series TRUE DC solar isolator the steps below along with the table overleaf will help you to select the right version for your installation.

Step 1.

Determine your maximum rated voltage (V_{max}). We include voltage ratings from 500V to 1500V for all pole configurations on the table overleaf.

Step 2.

Determine your maximum rated current (I_{max}). We include current ratings from 16A to 85A for all pole configurations on the table overleaf. Ensure the rating selected meets or exceeds your I_{max}.

Step 3.

Determine the number of strings your pv installation has.

Step 4.

Select a suitable isolator from the table overleaf, with sufficient load capacity at your required voltage. For multiple string installations, consider your preferred isolator configuration. eg. a two string installation might use two appropriately rated 2-Pole isolators or one appropriately rated 4-Pole isolator.

EXAMPLE REQUIREMENT: ***"I need a DC isolator rated for 25A at 1500V per string"***

- Using the table overleaf, scan horizontally across the 1500V rating line of each isolator option.
- Locate the required current rating option at 1500V DC, in this case, 25A.
- Note that the SI25 isolator in -4S pole configuration meets the 25A@1500VDC requirement and select this device.

If the installation had multiple strings of this rating, we could consider the SI25-DBL-4S version in a string box as a more compact and aesthetically pleasing option to the installation of multiple separate SI25-PEL64R-4S enclosed isolators.

For more information please email sales@imopc.com

Number of Poles	Max. No. of Strings	Suffix	Rated operational current I_e	Type	SI16	SI25	SI32	SI38	SI40	SI55	SI65
2 Poles - Single String 	**1**	**-2**	500V	A	16	25	32	45	48	55	76
			600V	A	16	25	32	45	48	55	76
			700V	A	16	25	32	36	37	55	76
			800V	A	16	20	23	30	35	55	65
			900V	A	16	17	20	25	31	43	55
			1000V	A	10	11.5	13	20	29	36	40
			1100V	A	8	10	11.5	-	19	25	-
			1200V	A	7	8.5	10	10	11	17	17
			1300V	A	6	7	8	-	10	14	-
			1400V	A	5	6	7	-	9	12	-
			1500V	A	3	5	6	6	8	10	10
4 Poles - Higher Voltage Rating 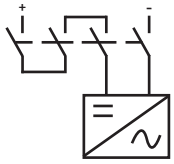	**1**	**-4S**	500V	A	16	25	32	45	48	55	76
			600V	A	16	25	32	45	48	55	76
			700V	A	16	25	32	45	48	55	76
			800V	A	16	25	32	45	48	55	76
			900V	A	16	25	32	45	48	55	76
			1000V	A	16	25	32	38	40	55	76
			1100V	A	16	25	32	-	40	55	55
			1200V	A	16	25	32	32	40	55	55
			1300V	A	16	25	32	-	40	55	55
			1400V	A	16	25	32	-	40	55	55
			1500V	A	16	25	32	32	40	55	55
4 Poles - Higher Current Rating 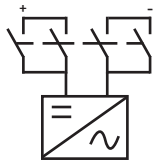	**1**	**-2H**	500V	A	29	45	58	65	72	85	85
			600V	A	29	45	55	58	68	85	85
			700V	A	22	27	32	36	49	77	80
			800V	A	17	20	23	30	42	63	65
			900V	A	16	17	20	25	31	43	55
			1000V	A	10	11.5	13	20	29	36	40
			1100V	A	8	10	11.5	-	19	25	-
			1200V	A	7	8.5	10	10	11	17	17
			1300V	A	6	7	8	-	10	14	-
			1400V	A	5	6	7	-	9	12	-
			1500V	A	3	5	6	6	8	10	10
4 Poles - Two Strings 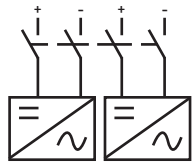	**2**	**-4**	500V	A	16	25	32	45	48	55	76
			600V	A	16	25	32	45	48	55	76
			700V	A	16	25	32	36	37	55	76
			800V	A	16	20	23	30	35	55	65
			900V	A	16	17	20	25	31	43	55
			1000V	A	10	11.5	13	20	29	36	40
			1100V	A	8	10	11.5	-	19	25	-
			1200V	A	7	8.5	10	10	11	17	17
			1300V	A	6	7	8	-	10	14	-
			1400V	A	5	6	7	-	9	12	-
			1500V	A	3	5	6	6	8	10	10
6 Poles - Three Strings 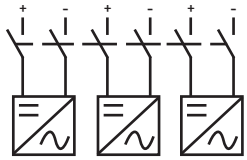	**3**	**-6**	500V	A	16	25	32	45	48	55	76
			600V	A	16	25	32	45	48	55	76
			700V	A	16	25	32	36	37	55	76
			800V	A	16	20	23	30	35	55	65
			900V	A	16	17	20	25	31	43	55
			1000V	A	10	11.5	13	20	29	36	40
			1100V	A	8	10	11.5	-	19	25	-
			1200V	A	7	8.5	10	10	11	17	17
			1300V	A	6	7	8	-	10	14	-
			1400V	A	5	6	7	-	9	12	-
			1500V	A	3	5	6	6	8	10	10
6 Poles - Higher Current Rating 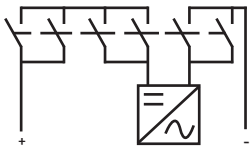	**1**	**-3H**	500V	A	29	45	58	-	72	85	85
			600V	A	29	45	58	-	72	85	85
			700V	A	29	43	55	-	72	85	85
			800V	A	29	40	51	-	68	85	85
			900V	A	29	38	47	-	62	78	78
			1000V	A	29	38	45	-	58	70	70
			1100V	A	19	27	37	-	-	-	-
			1200V	A	17	25	28	-	-	-	-
			1300V	A	15	21	25	-	-	-	-
			1400V	A	12	18	22	-	-	-	-
			1500V	A	10	14	20	-	-	-	-
8 Poles - Four Strings 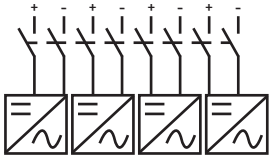	**4**	**-8**	500V	A	16	25	32	45	48	55	76
			600V	A	16	25	32	45	48	55	76
			700V	A	16	25	32	36	37	55	76
			800V	A	16	20	23	30	35	55	65
			900V	A	16	17	20	25	31	43	55
			1000V	A	10	11.5	13	20	29	36	40
			1100V	A	8	10	11.5	-	19	25	-
			1200V	A	7	8.5	10	10	11	17	17
			1300V	A	6	7	8	-	10	14	-
			1400V	A	5	6	7	-	9	12	-
			1500V	A	3	5	6	6	8	10	10
8 Poles - Higher Current Rating 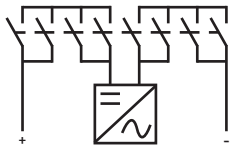	**1**	**-4H**	500V	A	29	45	58	65	72	85	85
			600V	A	29	45	58	65	72	85	85
			700V	A	29	45	58	65	72	85	85
			800V	A	29	45	58	65	72	85	85
			900V	A	29	45	58	65	72	85	85
			1000V	A	29	45	58	65	72	85	85
			1100V	A	29	45	54	-	60	68	-
			1200V	A	29	45	50	50	56	65	65
			1300V	A	26	39	44	-	50	61	-
			1400V	A	23	33	38	-	46	-	-
			1500V	A	20	26	32	32	42	55	55

Errors and omissions excepted. Subject to change without notice. © 2024 IMO Precision Controls Ltd

A. System Specifications and Ratings

- Maximum Voltage: 600 Volts
- Maximum Current: 60 Amps
- Allowable Wire: 14 AWG – 6 AWG
- Spacing: Please maintain a spacing of at least ½" between uninsulated live parts and fittings for conduit, armored cable, and uninsulated live parts of opposite polarity.
- Enclosure Rating: Type 3R
- Roof Slope Range: 2.5 – 12:12
- Max Side Wall Fitting Size: 1"
- Max Floor Pass-Through Fitting Size: 1"
- Ambient Operating Conditions: (-35°C) - (+75°C)
- Compliance:
  - JB-1: UL1741
  - Approved wire connectors: must conform to UL1741
- System Marking: **Interek Symbol and File #5015705**
- Periodic Re-inspections: If re-inspections yield loose components, loose fasteners, or any corrosion between components, components that are found to be affected are to be replaced immediately.

Table 1: Typical Wire Size, Torque Loads and Ratings

	1 Conductor	2 Conductor	Torque				
			Type	NM	Inch Lbs	Voltage	Current
ABB ZS6 terminal block	10-24 awg	16-24 awg	Sol/Str	0.5-0.7	6.2-8.85	600V	30 amp
ABB ZS10 terminal block	6-24 awg	12-20 awg	Sol/Str	1.0-1.6	8.85-14.16	600V	40 amp
ABB ZS16 terminal bock	4-24 awg	10-20 awg	Sol/Str	1.6-2.4	14.6-21.24	600V	60 amp
ABB M6/8 terminal block	8-22 awg		Sol/Str	.08-1	8.85	600V	50 amp
Ideal 452 Red WING-NUT Wire Connector	8-18 awg		Sol/Str			600V	
Ideal 451 Yellow WING-NUT Wire Connector	10-18 awg		Sol/Str			600V	
Ideal, In-Sure Push-In Connector Part #39	10-14 awg		Sol/Str			600V	
WAGO, 221-612	10-14 awg		Sol/Str			600V	
International Hydraulics 2S2/0	10-14 awg		Sol/Str	4	35		
	8 awg		Sol/Str	4.5	40		
Brumall 4-5,3	4-6 awg		Sol/Str		45	2000V	
	10-14 awg		Sol/Str		35		
Blackburn LL414	4-14 awg		Sol/Str				

Table 2: Minimum wire-bending space for conductors through a wall opposite terminals in mm (inches)

Wire size, AWG or		Wires per terminal (pole)							
		1		2		3		4 or More	
kcmil	(mm2)	mm	(inch)	mm	(inch)	mm	(inch)	mm	(inch)
14-10	(2.1-5.3)	Not specified		-		-		-	
8	(8.4)	38.1	(1-1/2)	-		-		-	
6	(13.3)	50.8	(2)	-		-		-	