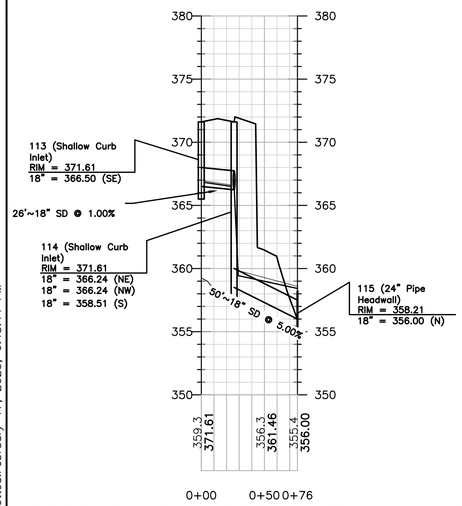

PROFILE VIEW: STORM 113–114–115

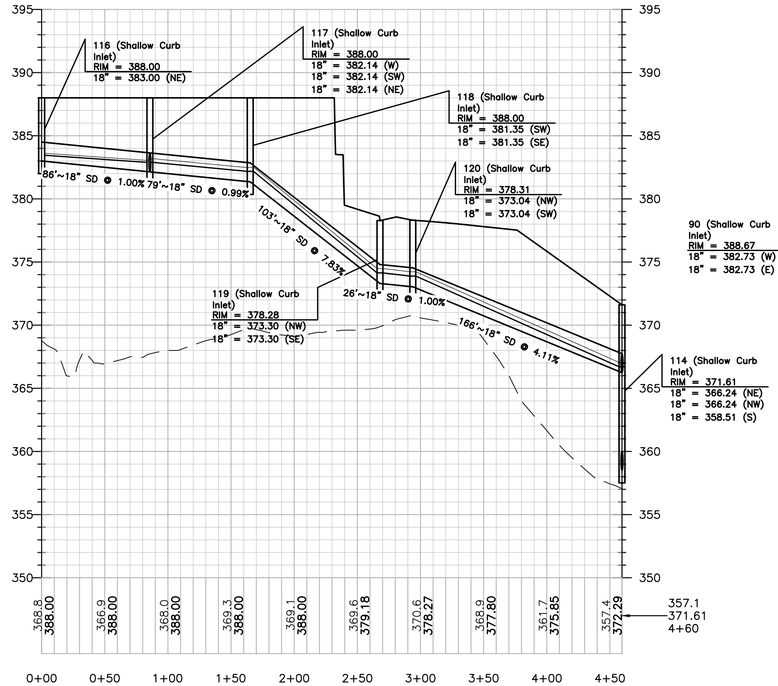

PROFILE VIEW: STORM 116–117–118–119–120–114

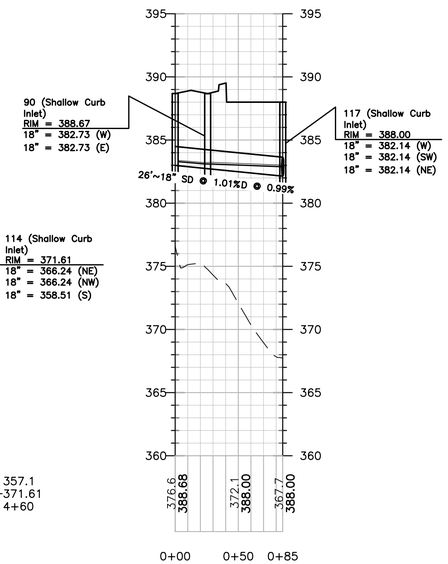

PROFILE VIEW: STORM 91–90–117

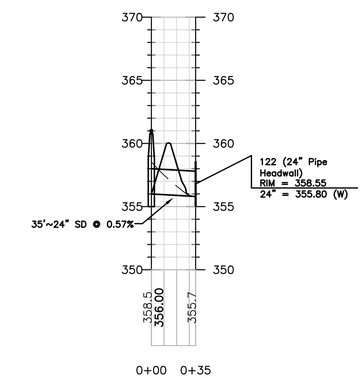

PROFILE VIEW: STORM 121–122

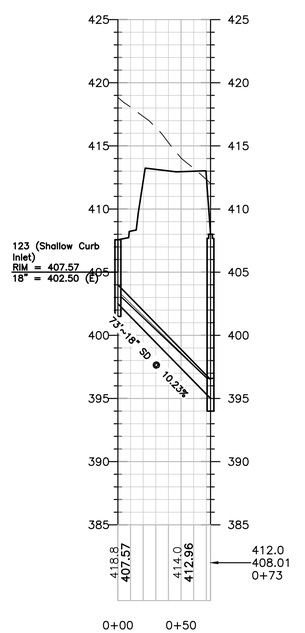

PROFILE VIEW: STORM 123–124

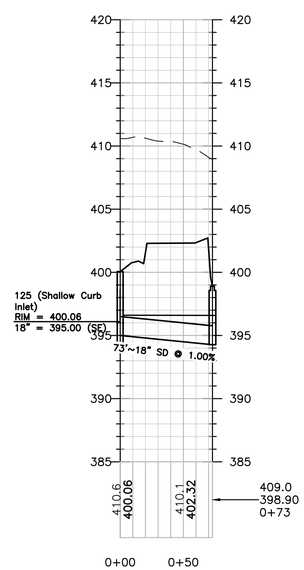

PROFILE VIEW: STORM 125–126

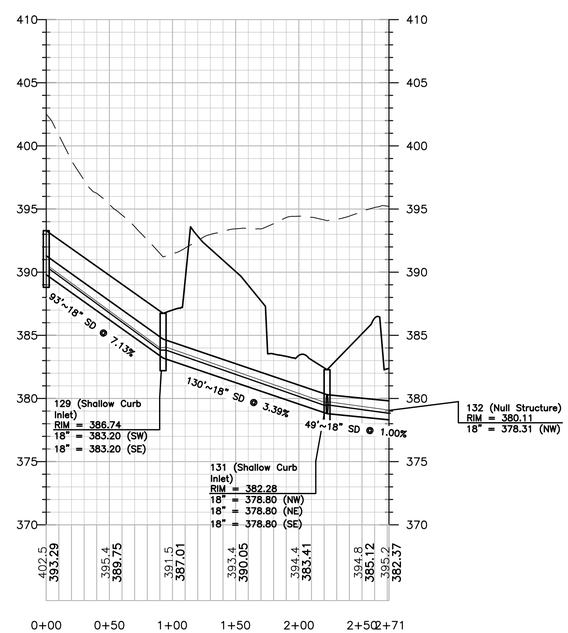

PROFILE VIEW: STORM 127–129–131–132

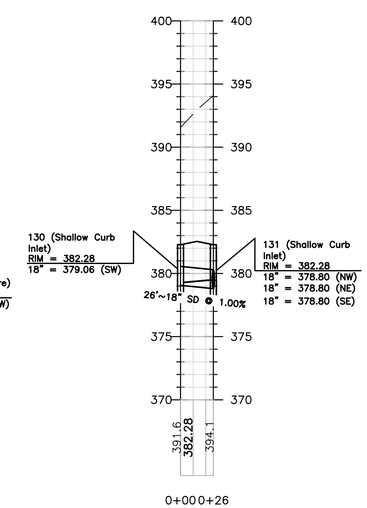

PROFILE VIEW: STORM 130–131

GRAPHIC SCALES IN FEET
0 60 120 180
5 10 15

WOOLPERT
ARCHITECTURE | ENGINEERING | GEOSPATIAL
13860 Ballantyne Corporate Place, Suite 425
Charlotte, NC 28227

CIVIL PERMIT PLAN SET

ISSUANCE SCHEDULE

NUMBER	DATE	DESCRIPTION
-	-	-
1	10/06/22	CONDITIONAL ZONING RESUBMITTAL
2	12/09/22	CONDITIONAL ZONING RESUBMITTAL
3	02/17/23	CONDITIONAL ZONING RESUBMITTAL

BEECHWOOD HOMES
SOUTH CREEK
MIXED USE DEVELOPMENT
S COLUMBIA ST.
CHAPEL HILL, NC 27514

PROJECT NO:	082447
DATE ISSUED:	02/17/23
DESIGNED BY:	RMN
DRAWN BY:	VCS
CHECKED BY:	RMN

SHEET NAME:
DRAINAGE PROFILES

SHEET NO:
C-310

Layout Tab Name: C-310 DRAINAGE PROFILES
Last Saved By:JacobsJ, 2/17/2023 3:23:46 PM
W:\Srvln\DE\Dayton\Clients\Beechwood\082447 South Creek\4.0 Disciplines\Civil\Cadd\Cd\82447-STM PROFILE.dwg Plotted By:Jacobs, Joe Plotted:February 17, 2023, 6:48:44 PM

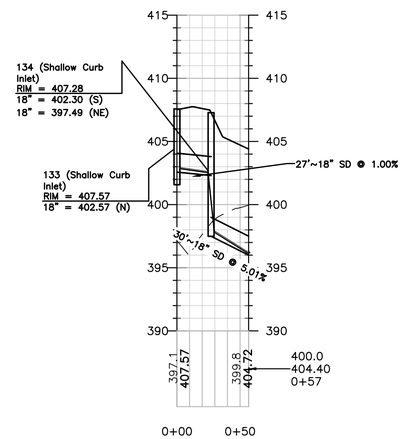

PROFILE VIEW: STORM 133–134–135

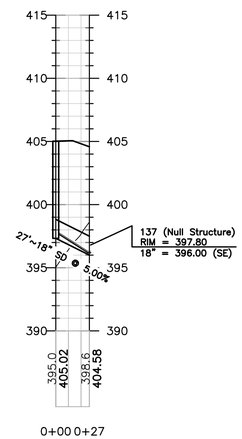

PROFILE VIEW: STORM 136–137

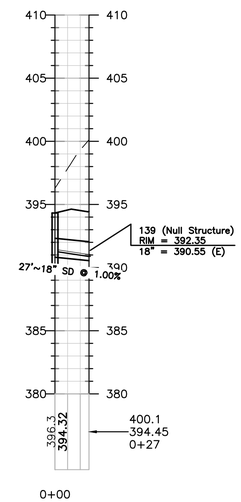

PROFILE VIEW: STORM 138–139

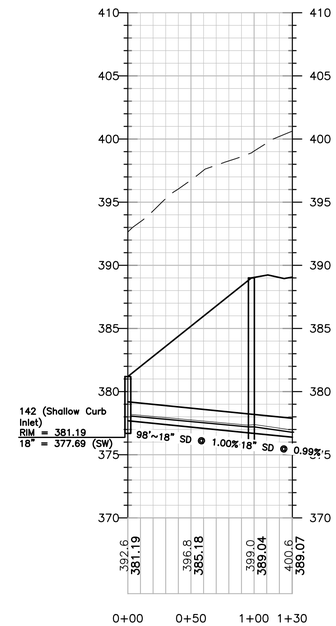

PROFILE VIEW: STORM 142–140–141

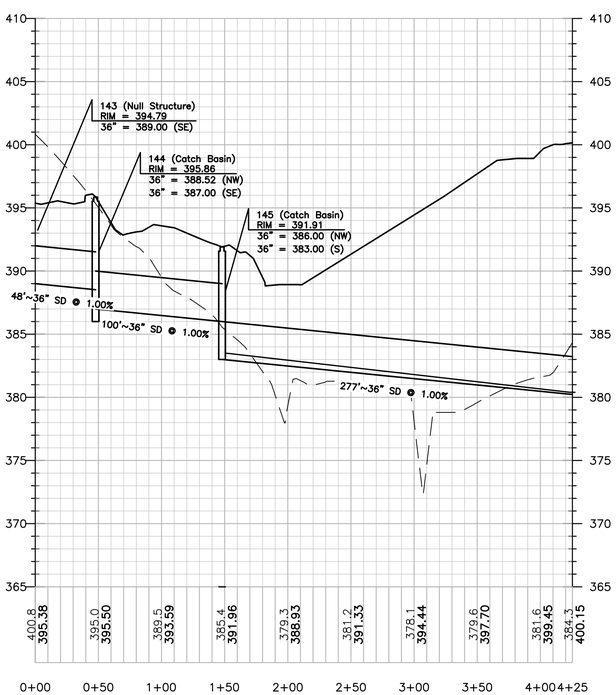

PROFILE VIEW: STORM 143–144–145–146

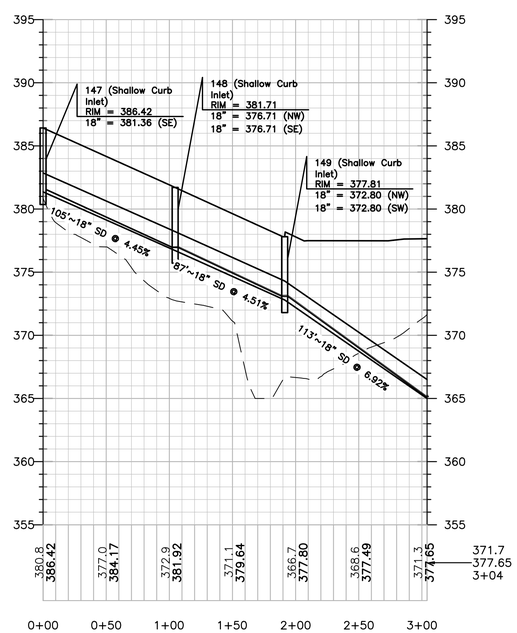

PROFILE VIEW: STORM 147–148–149–150

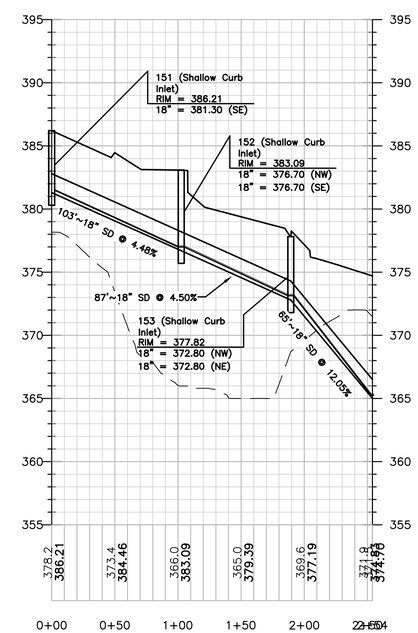

PROFILE VIEW: STORM 151–152–153–154

GRAPHIC SCALES IN FEET
0 60 120 180
5 10 15

WOOLPERT
ARCHITECTURE | ENGINEERING | GEOSPATIAL
13860 Ballantyne Corporate Place, Suite 425
Charlotte, NC 28227

CIVIL PERMIT PLAN SET

ISSUANCE SCHEDULE

NUMBER	DATE	DESCRIPTION
1	10/05/22	CONDITIONAL ZONING RESUBMITTAL
2	12/09/22	CONDITIONAL ZONING RESUBMITTAL
3	02/17/23	CONDITIONAL ZONING RESUBMITTAL

BEECHWOOD HOMES
SOUTH CREEK
MIXED USE DEVELOPMENT
S COLUMBIA ST.
CHAPEL HILL, NC 27514

PROJECT NO:	082447
DATE ISSUED:	02/17/23
DESIGNED BY:	RMN
DRAWN BY:	VCS
CHECKED BY:	RMN

SHEET NAME:
DRAINAGE PROFILES

SHEET NO:
C-311

Layout Tab Name: C-311 DRAINAGE PROFILES
Last Saved By:JacobsJ, 2/17/2023 3:23:46 PM
W:\Srvln\DE\Dayton\Clients\Beechwood\082447 South Creek\4.0 Disciplines\Civil\Cadd\Cd\82447-STM PROFILE.dwg Plotted By:Jacobs, Joe Plotted:February 17, 2023, 6:49:04 PM

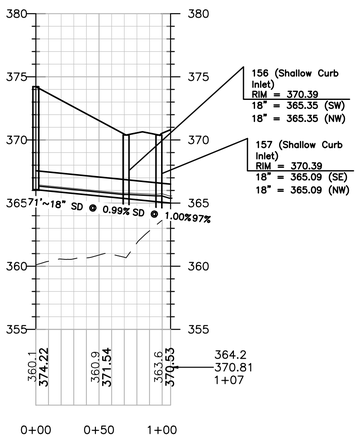

PROFILE VIEW: STORM 155–156–157–158

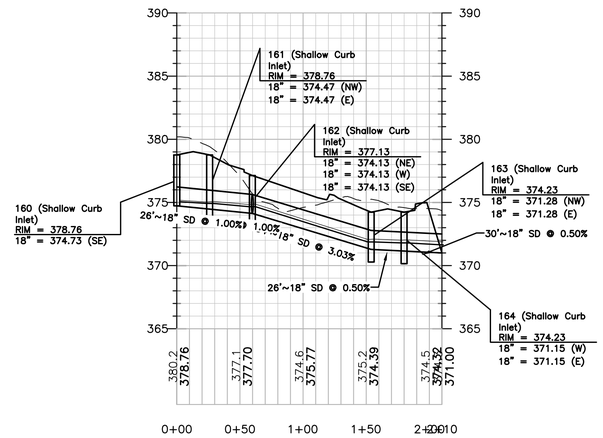

PROFILE VIEW: STORM 160–161–162–163–164–165

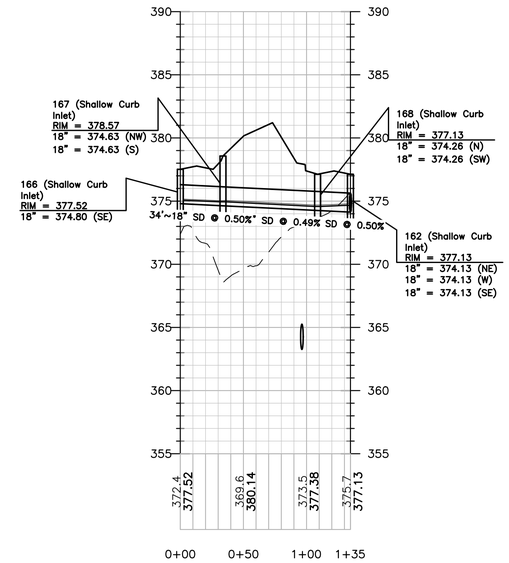

PROFILE VIEW: STORM 166–167–168–162

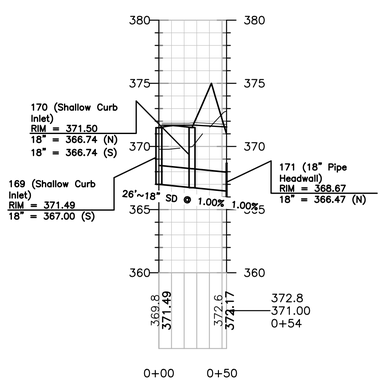

PROFILE VIEW: STORM 169–170–171

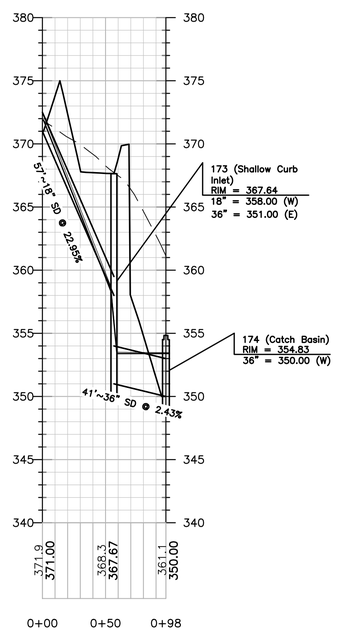

PROFILE VIEW: STORM 172–173–174

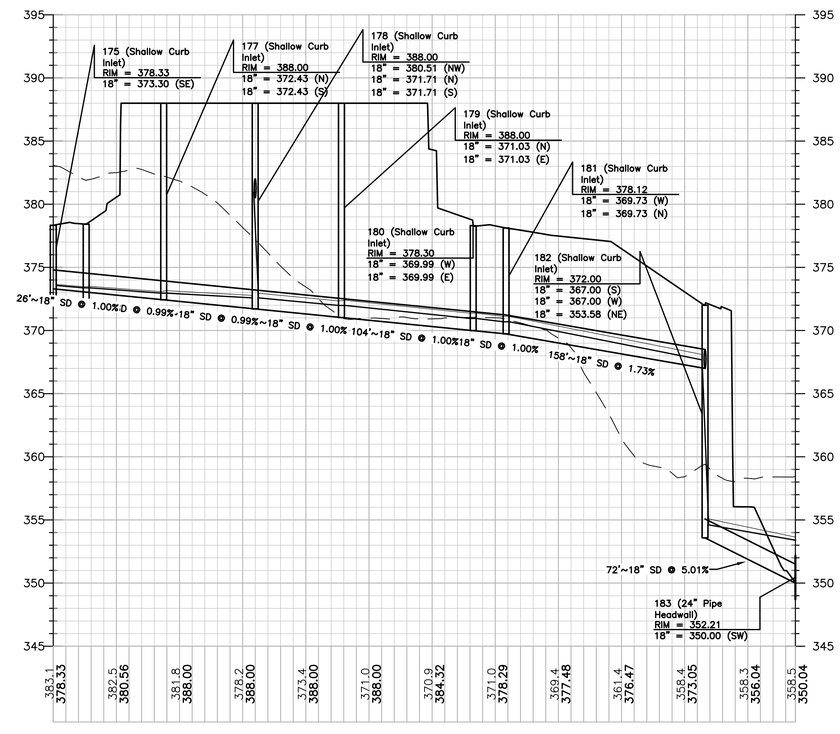

PROFILE VIEW: STORM 175–176–177–178–179–180–181–182–183

GRAPHIC SCALES IN FEET
0 60 120 180
15 10 5

WOOLPERT
ARCHITECTURE | ENGINEERING | GEOSPATIAL
13860 Ballantyne Corporate Place, Suite 425
Charlotte, NC 28227

CIVIL PERMIT PLAN SET

ISSUANCE SCHEDULE

NUMBER	DATE	DESCRIPTION
-	-	-
1	10/06/22	CONDITIONAL ZONING RESUBMITTAL
2	12/09/22	CONDITIONAL ZONING RESUBMITTAL
3	02/17/23	CONDITIONAL ZONING RESUBMITTAL

BEECHWOOD HOMES
SOUTH CREEK
MIXED USE DEVELOPMENT
S COLUMBIA ST.
CHAPEL HILL, NC 27514

PROJECT NO:	082447
DATE ISSUED:	02/17/23
DESIGNED BY:	RMN
DRAWN BY:	VCS
CHECKED BY:	RMN

SHEET NAME:
DRAINAGE PROFILES

SHEET NO:
C-312

Layout Tab Name: C-312 DRAINAGE PROFILES
Last Saved By:JacobsJ, 2/17/2023 3:23:46 PM
W:\Srvln\DE\Dayton\Clients\Beechwood\082447 South Creek\4.0 Disciplines\Civil\Cadd\Cd\82447-STM PROFILE.dwg Plotted By:Jacobs, Joe Plotted:February 17, 2023, 6:49:42 PM

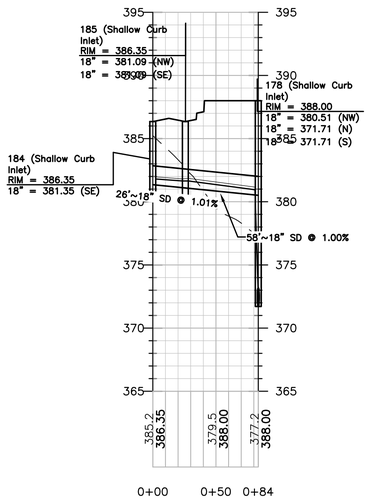

PROFILE VIEW: STORM 184–185–178

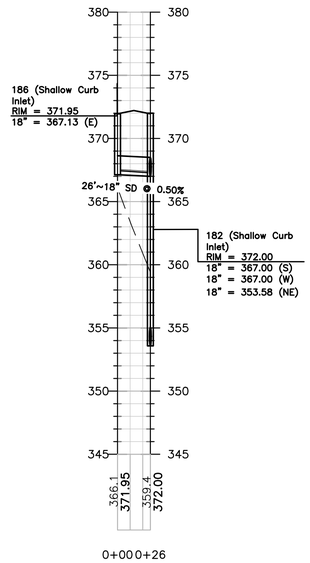

PROFILE VIEW: STORM 186–182

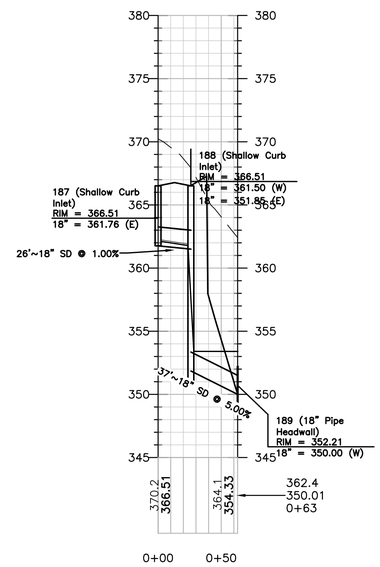

PROFILE VIEW: STORM 187–188–189

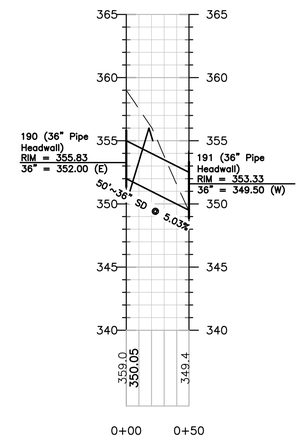

PROFILE VIEW: STORM 190–191

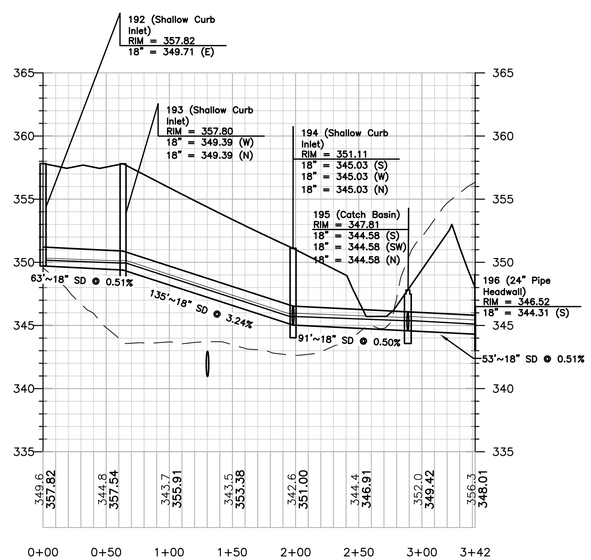

PROFILE VIEW: STORM 192–193–194–195–196

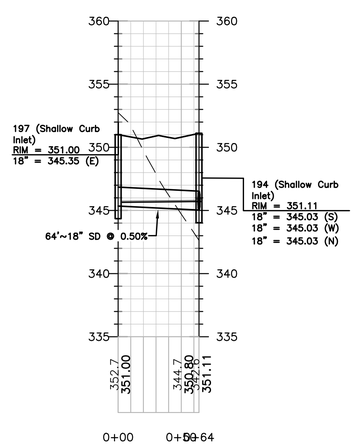

PROFILE VIEW: STORM 197–194

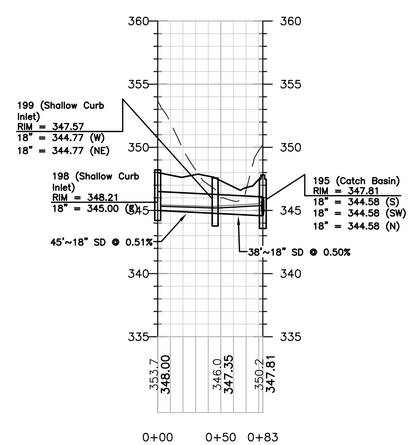

PROFILE VIEW: STORM 198–199–195

GRAPHIC SCALES IN FEET
0 60 120 180
5 10 15

WOOLPERT
ARCHITECTURE | ENGINEERING | GEOSPATIAL
13860 Ballantyne Corporate Place, Suite 425
Charlotte, NC 28227

CIVIL PERMIT PLAN SET

ISSUANCE SCHEDULE

NUMBER	DATE	DESCRIPTION
1	10/5/22	CONDITIONAL ZONING RESUBMITTAL
2	12/9/22	CONDITIONAL ZONING RESUBMITTAL
3	02/17/23	CONDITIONAL ZONING RESUBMITTAL

BEECHWOOD HOMES
SOUTH CREEK
MIXED USE DEVELOPMENT
S COLUMBIA ST.
CHAPEL HILL, NC 27514

PROJECT NO:	082447
DATE ISSUED:	02/17/23
DESIGNED BY:	RMN
DRAWN BY:	VCS
CHECKED BY:	RMN

SHEET NAME:
DRAINAGE PROFILES

SHEET NO:
C-313

Layout Tab Name: C-313 DRAINAGE PROFILES
Last Saved By:JacobsJ, 2/17/2023 3:23:46 PM
W:\Srvln\DE\Dayton\Clients\Beechwood\082447 South Creek\4.0 Disciplines\Civil\Cadd\Cd\82447-STM PROFILE.dwg Plotted By:Jacobs, Joe Plotted:February 17, 2023, 6:50:03 PM

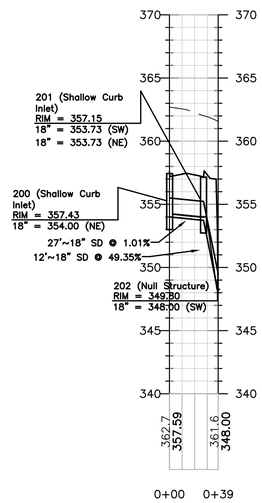

PROFILE VIEW: STORM 200–201–202

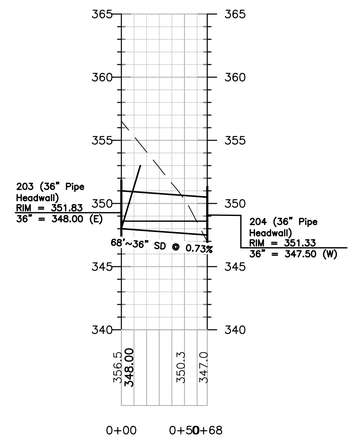

PROFILE VIEW: STORM 203–204

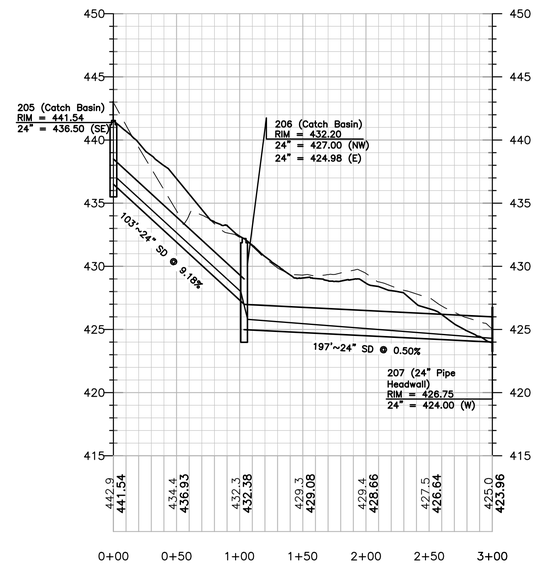

PROFILE VIEW: NCDOT STORM 205–206–207

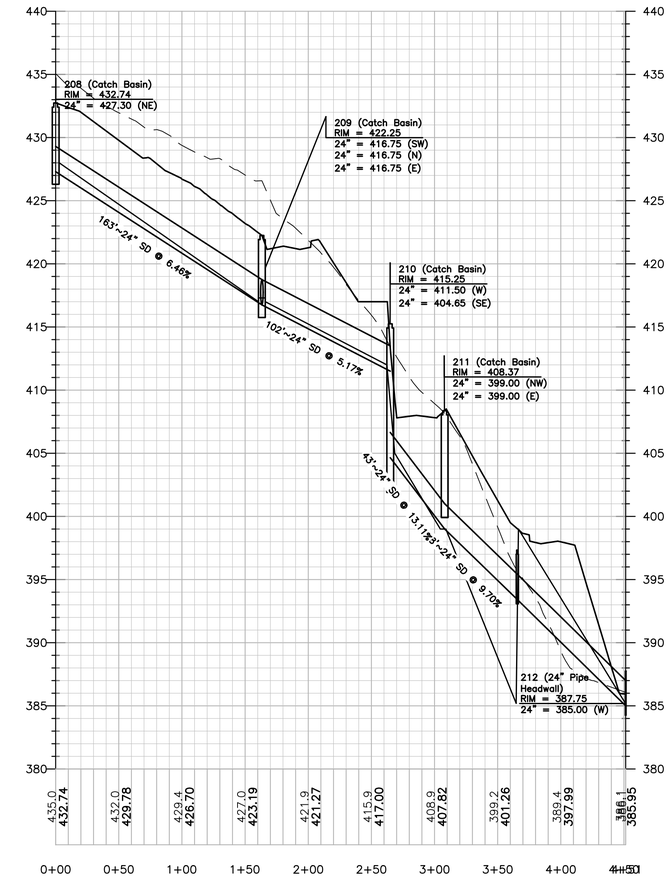

PROFILE VIEW: NCDOT STORM 208–209–210–211–212

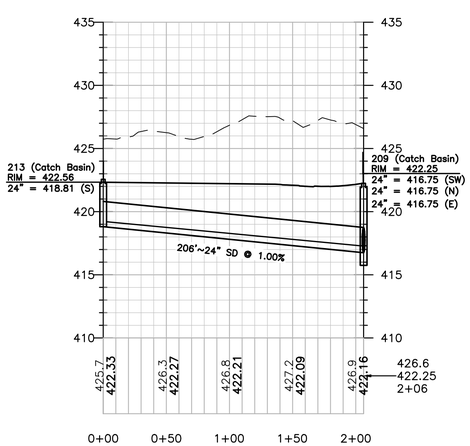

PROFILE VIEW: NCDOT STORM 213–209

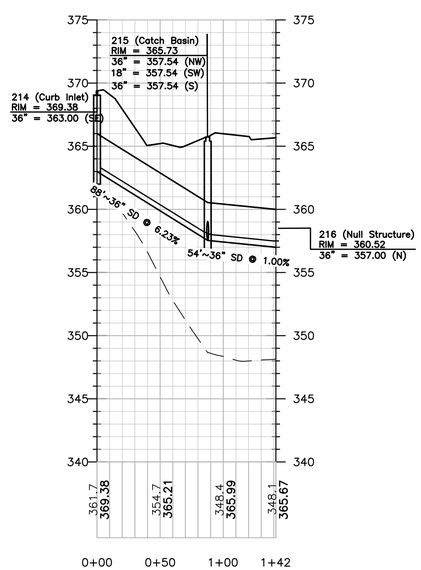

PROFILE VIEW: STORM 214–215–216

GRAPHIC SCALES IN FEET
0 60 120 180
5 10 15

WOOLPERT
ARCHITECTURE | ENGINEERING | GEOSPATIAL
13860 Ballantyne Corporate Place, Suite 425
Charlotte, NC 28227

CIVIL PERMIT PLAN SET

ISSUANCE SCHEDULE

NUMBER	DATE	DESCRIPTION
1	10/06/22	CONDITIONAL ZONING RESUBMITTAL
2	12/09/22	CONDITIONAL ZONING RESUBMITTAL
3	02/17/23	CONDITIONAL ZONING RESUBMITTAL

BEECHWOOD HOMES
SOUTH CREEK
MIXED USE DEVELOPMENT
S COLUMBIA ST.
CHAPEL HILL, NC 27514

PROJECT NO:	082447
DATE ISSUED:	02/17/23
DESIGNED BY:	RMN
DRAWN BY:	VCS
CHECKED BY:	RMN

SHEET NAME:
DRAINAGE PROFILES

SHEET NO:
C-314

Layout Tab Name: C-314 DRAINAGE PROFILES
Last Saved By:Jacobsj, 2/17/2023 3:23:46 PM
W:\Srvin\DE\Dayton\Clients\Beechwood\082447 South Creek\4.0 Disciplines\Civil\Cadd\Cd\82447-STM PROFILE.dwg Plotted By:Jacobs, Joe Plotted:February 17, 2023, 6:50:32 PM

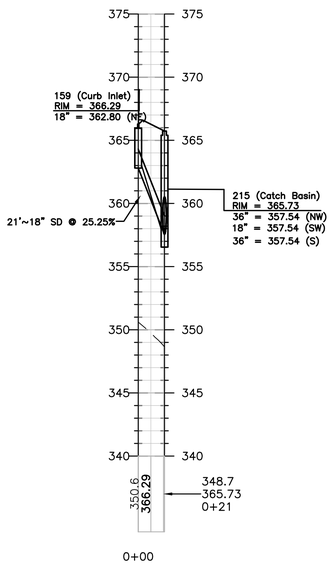

PROFILE VIEW: STORM 159–215

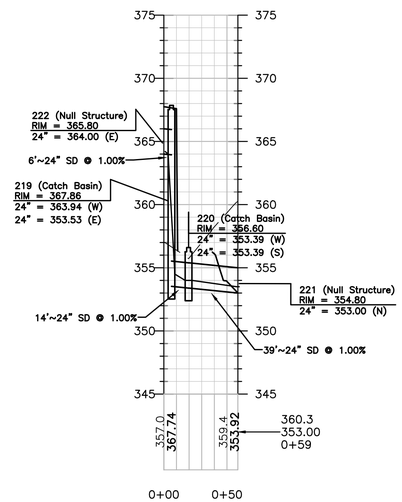

PROFILE VIEW: STORM 222–219–220–221

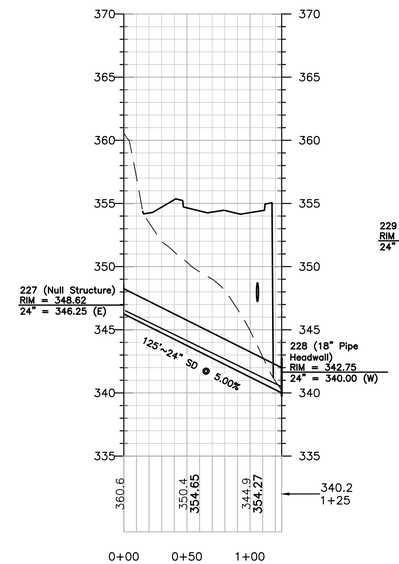

PROFILE VIEW: STORM 227–228

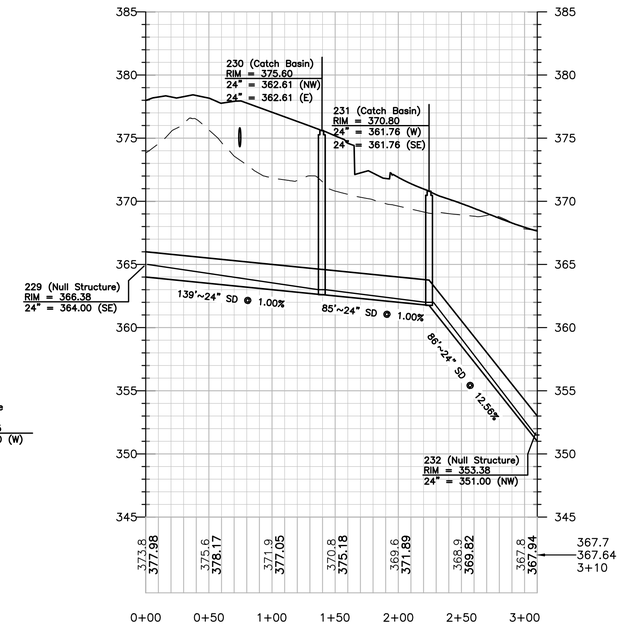

PROFILE VIEW: STORM 229–230–231–173

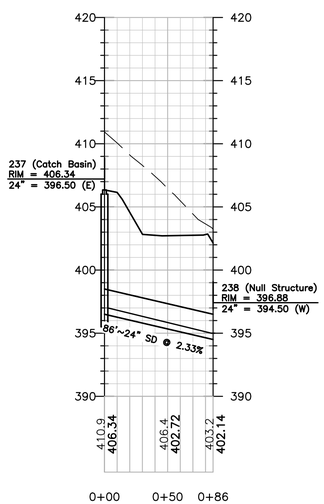

PROFILE VIEW: STORM 237–238

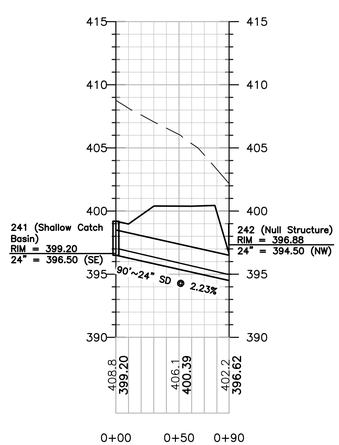

PROFILE VIEW: STORM 241–242

GRAPHIC SCALES IN FEET
0 60 120 180
5 10 15

WOOLPERT
ARCHITECTURE | ENGINEERING | GEOSPATIAL
13860 Ballantyne Corporate Place, Suite 425
Charlotte, NC 28227

CIVIL PERMIT PLAN SET

ISSUANCE SCHEDULE

NUMBER	DATE	DESCRIPTION
1	10/05/22	CONDITIONAL ZONING RESUBMITTAL
2	12/09/22	CONDITIONAL ZONING RESUBMITTAL
3	02/17/23	CONDITIONAL ZONING RESUBMITTAL

BEECHWOOD HOMES
SOUTH CREEK
MIXED USE DEVELOPMENT
S COLUMBIA ST.
CHAPEL HILL, NC 27514

PROJECT NO:	082447
DATE ISSUED:	02/17/23
DESIGNED BY:	RMN
DRAWN BY:	VCS
CHECKED BY:	RMN

SHEET NAME:
DRAINAGE PROFILES

SHEET NO:
C-315

Layout Tab Name: C-315 DRAINAGE PROFILES
Last Saved By:JacobsJ, 2/17/2023 3:23:46 PM
W:\Srvln\DE\Dayton\Clients\Beechwood\082447 South Creek\4.0 Disciplines\Civil\Cadd\Cd\82447-STM PROFILE.dwg Plotted By:Jacobs, Joe Plotted:February 17, 2023, 6:50:51 PM

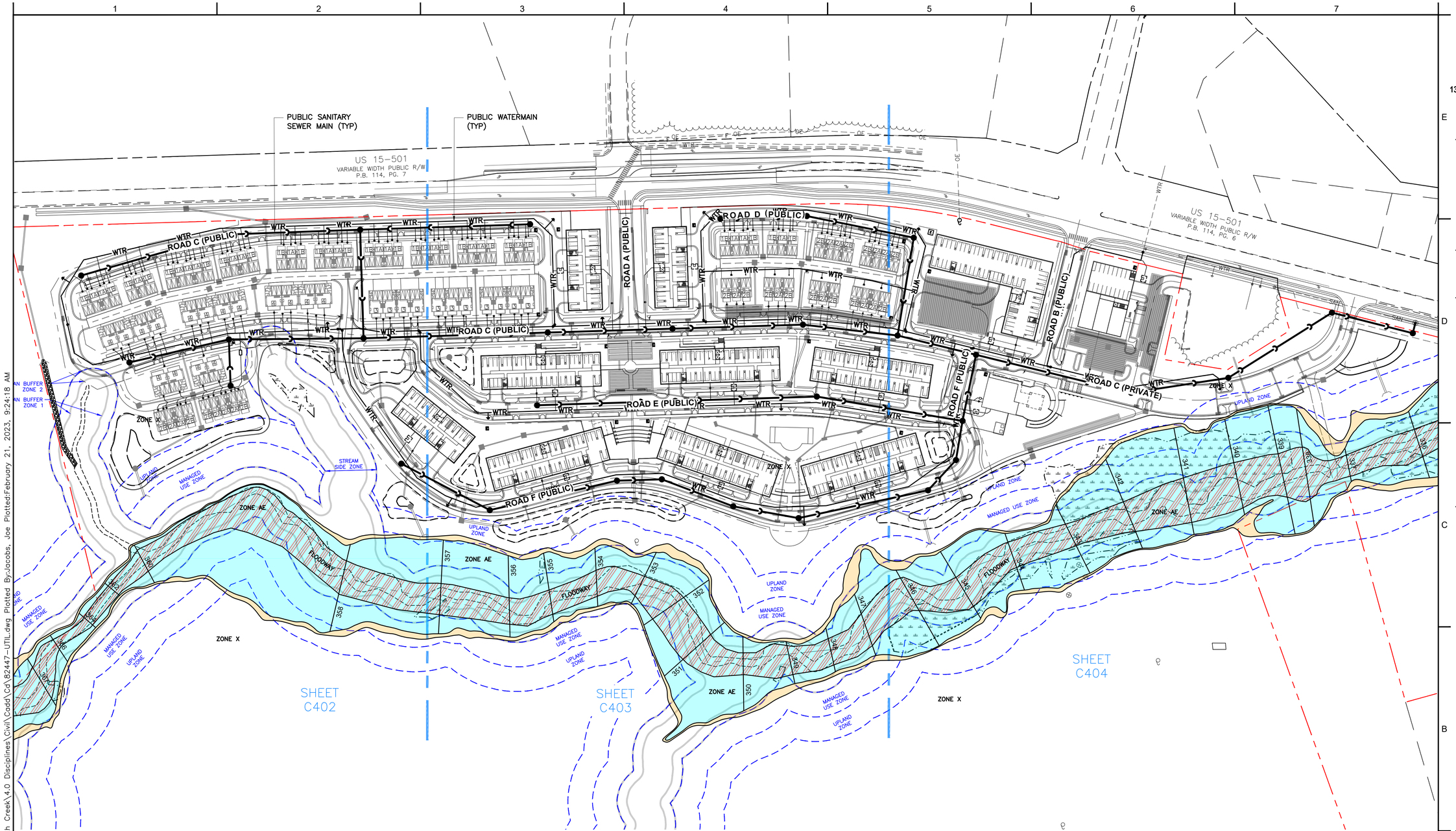

OVERALL SITE MAP

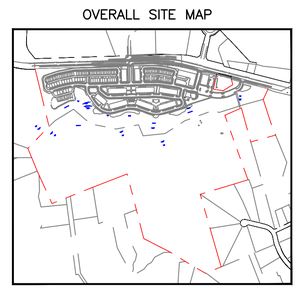

North Carolina 811
www.nc811.org

0 100 200 300
GRAPHIC SCALE IN FEET
1IN = 100FT

N

WOOLPERT
ARCHITECTURE | ENGINEERING | GEOSPATIAL
13860 Ballantyne Corporate Place, Suite 425
Charlotte, NC 28227

CIVIL PERMIT PLAN SET

ISSUANCE SCHEDULE

NUMBER	DATE	DESCRIPTION
0	07/22/22	CONDITIONAL ZONING SUBMITTAL
1	10/05/22	CONDITIONAL ZONING RESUBMITTAL
2	12/09/22	CONDITIONAL ZONING RESUBMITTAL
3	02/17/23	CONDITIONAL ZONING RESUBMITTAL

BEECHWOOD HOMES
SOUTH CREEK
MIXED USE DEVELOPMENT
S COLUMBIA ST.
CHAPEL HILL, NC 27514

PROJECT NO:	082447
DATE ISSUED:	02/17/23
DESIGNED BY:	RMN
DRAWN BY:	VCS
CHECKED BY:	RMN

SHEET NAME:
OVERALL UTILITY PLAN

SHEET NO:
C-401

Layout Tab Name: C-401 OVERALL UTILITY PLAN
Last Saved By:Jacobsj, 2/21/2023 9:23:24 AM
W:\Srvin\DE\Dayton\Clients\Beechwood\082447 South Creek\4.0 Disciplines\Civil\Cadd\Cd\82447-UTIL.dwg Plotted By:Jacobs, Joe Plotted:February 21, 2023, 9:24:18 AM

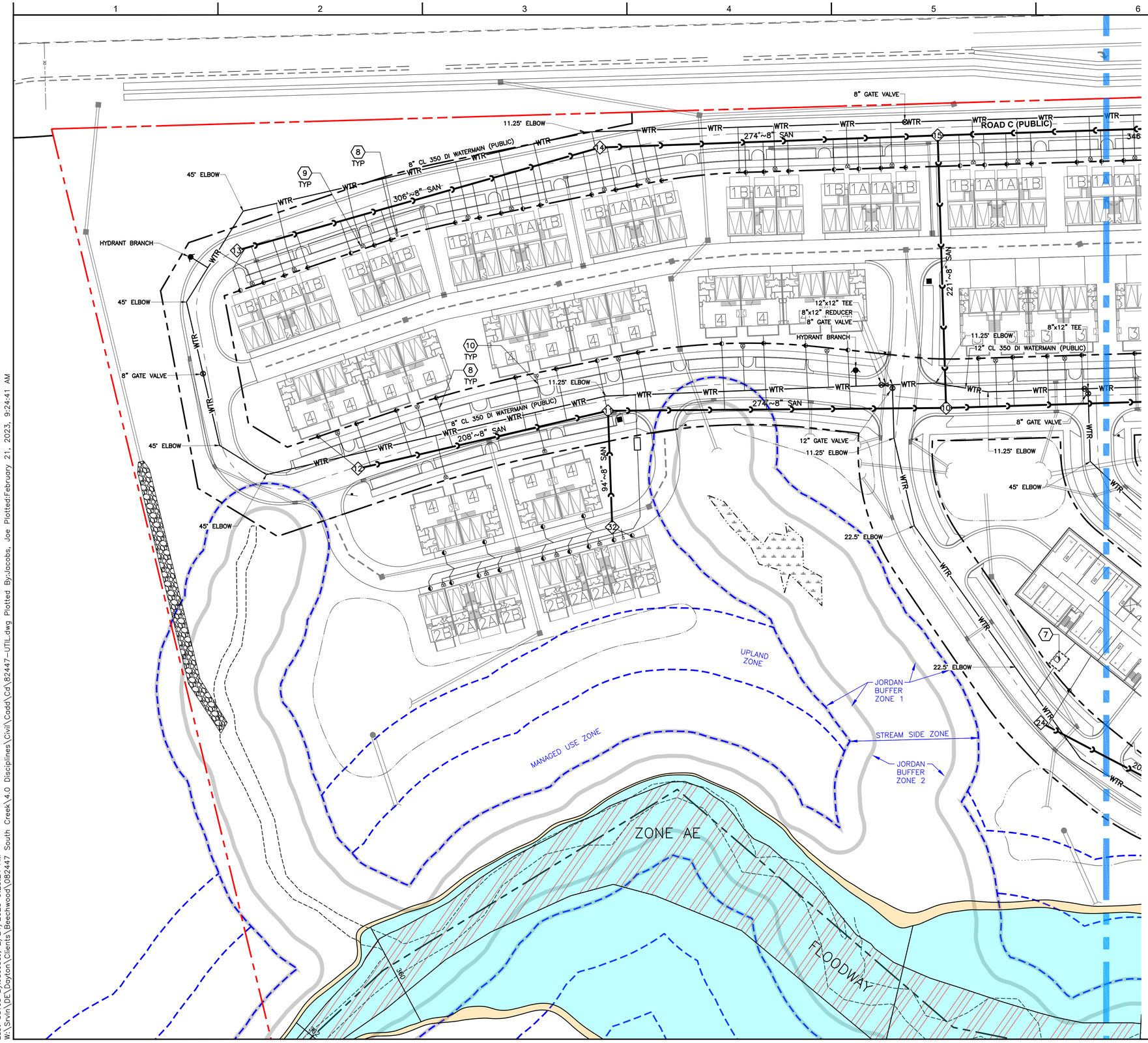

NOTES

1. SEE SHEET C-003 FOR GENERAL NOTES.
2. CONTRACTOR SHALL REFER TO OTHER PLANS WITHIN THIS CONSTRUCTION SET FOR OTHER PERTINENT INFORMATION. IT IS NOT THE ENGINEER'S INTENT THAT ANY SINGLE PLAN SHEET WITHIN THIS SET OF DOCUMENTS FULLY DEPICT ALL WORK ASSOCIATED WITH THE PROJECT.
3. REFER TO ARCHITECTURAL PLANS FOR EXACT BUILDING UTILITY ENTRANCE LOCATIONS AND MEP PLANS FOR CONTINUATION INTO BUILDING.
4. ALL WATER MAIN PIPE MATERIAL SHALL BE DUCTILE IRON CLASS 350 PER WATER DEPARTMENT REQUIREMENTS.
5. ALL SANITARY PIPE MATERIAL SHALL BE SDR 35 PER SANITARY SEWER DEPARTMENT REQUIREMENTS.
6. CONTRACTOR TO PRACTICE CAUTION WHEN WORKING IN AREA OF EXISTING UTILITIES.
7. DOMESTIC AND FIRE SERVICE BACKFLOW PREVENTERS SHALL BE INSTALLED WITHIN BUILDINGS. REFER TO MEP PLANS FOR DETAILS.
8. CONTRACTOR SHALL VERIFY LOCATION, ELEVATIONS AND CONDITION OF ALL EXISTING UTILITIES PRIOR TO CONSTRUCTION. REPORT DISCREPANCIES TO ENGINEER.
9. UNDER NO CIRCUMSTANCE SHALL THE POOL BACKWASH WATER BE DISCHARGED INTO THE STORM SEWER SYSTEM
10. DE-WATERING OF THE POOL INTO THE STORM SEWER SYSTEM IS NOT ALLOWED UNLESS DE-CHLORINATED. SALTWATER POOL DISCHARGE IS PROHIBITED. SIGNAGE TO THIS EFFECT SHALL BE PERMANENTLY AFFIXED TO THE POOL EQUIPMENT

KEYNOTES (X)

1. CORE AND CONNECT TO EXISTING STRUCTURE; CONTRACTOR SHALL FIELD VERIFY THAT CONDITION OF STRUCTURE IS SUITABLE FOR MODIFICATION. IF NOT, THEN IT SHOULD BE REPLACED.
2. OUTSIDE DROP MANHOLE CONNECTION.
3. SANITARY LATERAL CONNECTION WITH CLEANOUT.
4. GREASE INTERCEPTOR.
5. CONNECT TO EXISTING 16" TEE WITH A 16" GATE VALVE.
6. DEFLECT PIPING MAXIMUM 5° TO ACHIEVE LAYOUT.
7. COMBINED SERVICE WATER METER VAULT.
8. SINGLE SERVICE WATER METER VAULT.
9. DUAL SERVICE WATER METER VAULT.
10. WATER SERVICE
11. MINIMUM 18" VERTICAL CLEARANCE AT UTILITY CROSSING

OVERALL SITE MAP

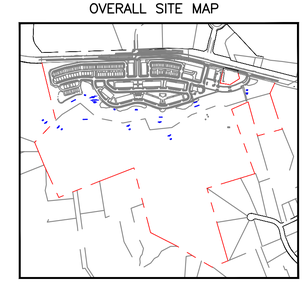

North Carolina 811
www.nc811.org

N

0 40 80 120
GRAPHIC SCALE IN FEET
1IN = 40FT

WOOLPERT
ARCHITECTURE | ENGINEERING | GEOSPATIAL
13860 Ballantyne Corporate Place, Suite 425
Charlotte, NC 28227

CIVIL PERMIT PLAN SET

ISSUANCE SCHEDULE

NUMBER	DATE	DESCRIPTION
0	07/22/22	CONDITIONAL ZONING SUBMITTAL
1	10/06/22	CONDITIONAL ZONING RESUBMITTAL
2	12/09/22	CONDITIONAL ZONING RESUBMITTAL
3	02/17/23	CONDITIONAL ZONING RESUBMITTAL

BEECHWOOD HOMES
SOUTH CREEK
MIXED USE DEVELOPMENT
S COLUMBIA ST.
CHAPEL HILL, NC 27514

PROJECT NO:	082447
DATE ISSUED:	02/17/23
DESIGNED BY:	RMN
DRAWN BY:	VCS
CHECKED BY:	RMN

SHEET NAME:
UTILITY PLAN

SHEET NO:
C-402

Layout Tab Name: C-402 UTILITY PLAN
Last Saved By:Jacobsj, 2/21/2023 9:23:24 AM
W:\Srvln\DE\Dayton\Clients\Beechwood\082447 South Creek\4.0 Disciplines\Civil\Cadd\Cd\82447-UTIL.dwg Plotted By:Jacobs, Joe Plotted:February 21, 2023, 9:24:41 AM

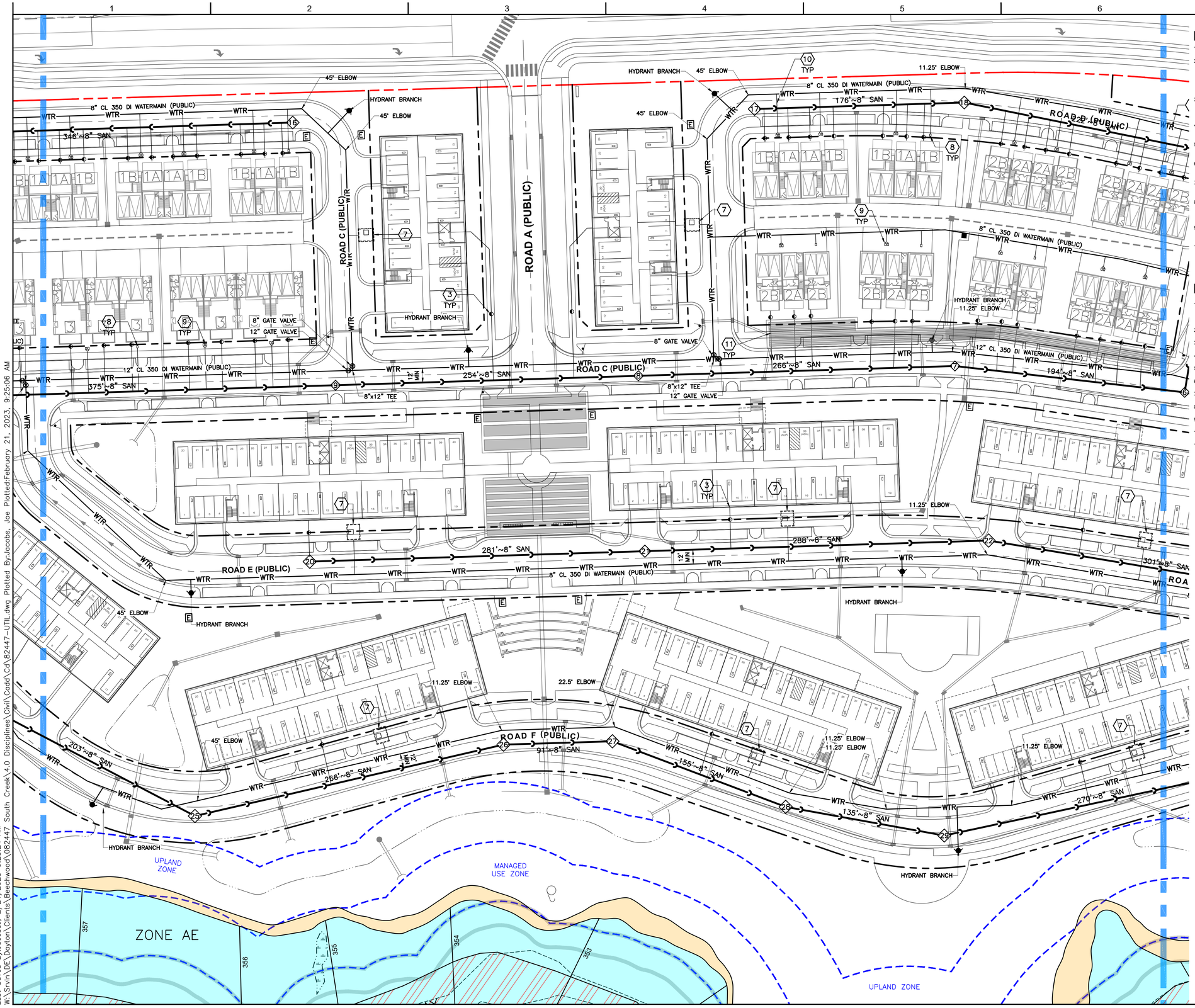

NOTES

1. SEE SHEET C-003 FOR GENERAL NOTES.
2. CONTRACTOR SHALL REFER TO OTHER PLANS WITHIN THIS CONSTRUCTION SET FOR OTHER PERTINENT INFORMATION. IT IS NOT THE ENGINEER'S INTENT THAT ANY SINGLE PLAN SHEET WITHIN THIS SET OF DOCUMENTS FULLY DEPICT ALL WORK ASSOCIATED WITH THE PROJECT.
3. REFER TO ARCHITECTURAL PLANS FOR EXACT BUILDING UTILITY ENTRANCE LOCATIONS AND MEP PLANS FOR CONTINUATION INTO BUILDING.
4. ALL WATER MAIN PIPE MATERIAL SHALL BE DUCTILE IRON CLASS 350 PER WATER DEPARTMENT REQUIREMENTS.
5. ALL SANITARY PIPE MATERIAL SHALL BE SDR 35 PER SANITARY SEWER DEPARTMENT REQUIREMENTS.
6. CONTRACTOR TO PRACTICE CAUTION WHEN WORKING IN AREA OF EXISTING UTILITIES.
7. DOMESTIC AND FIRE SERVICE BACKFLOW PREVENTERS SHALL BE INSTALLED WITHIN BUILDINGS. REFER TO MEP PLANS FOR DETAILS.
8. CONTRACTOR SHALL VERIFY LOCATION, ELEVATIONS AND CONDITION OF ALL EXISTING UTILITIES PRIOR TO CONSTRUCTION. REPORT DISCREPANCIES TO ENGINEER.
9. UNDER NO CIRCUMSTANCE SHALL THE POOL BACKWASH WATER BE DISCHARGED INTO THE STORM SEWER SYSTEM
10. DE-WATERING OF THE POOL INTO THE STORM SEWER SYSTEM IS NOT ALLOWED UNLESS DE-CHLORINATED. SALTWATER POOL DISCHARGE IS PROHIBITED. SIGNAGE TO THIS EFFECT SHALL BE PERMANENTLY AFFIXED TO THE POOL EQUIPMENT

KEYNOTES (X)

1. CORE AND CONNECT TO EXISTING STRUCTURE; CONTRACTOR SHALL FIELD VERIFY THAT CONDITION OF STRUCTURE IS SUITABLE FOR MODIFICATION. IF NOT, THEN IT SHOULD BE REPLACED.
2. OUTSIDE DROP MANHOLE CONNECTION.
3. SANITARY LATERAL CONNECTION WITH CLEANOUT.
4. GREASE INTERCEPTOR.
5. CONNECT TO EXISTING 16" TEE WITH A 16" GATE VALVE.
6. DEFLECT PIPING MAXIMUM 5° TO ACHIEVE LAYOUT.
7. COMBINED SERVICE WATER METER VAULT.
8. SINGLE SERVICE WATER METER VAULT.
9. DUAL SERVICE WATER METER VAULT.
10. WATER SERVICE
11. MINIMUM 18" VERTICAL CLEARANCE AT UTILITY CROSSING

OVERALL SITE MAP

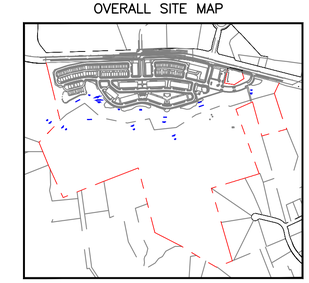

North Carolina 811
www.nc811.org

N

0 40 80 120
GRAPHIC SCALE IN FEET
1IN = 40FT

WOOLPERT
ARCHITECTURE | ENGINEERING | GEOSPATIAL
13860 Ballantyne Corporate Place, Suite 425
Charlotte, NC 28227

CIVIL PERMIT PLAN SET

ISSUANCE SCHEDULE

NUMBER	DATE	DESCRIPTION
0	07/22/22	CONDITIONAL ZONING SUBMITTAL
1	10/05/22	CONDITIONAL ZONING RESUBMITTAL
2	12/09/22	CONDITIONAL ZONING RESUBMITTAL
3	02/17/23	CONDITIONAL ZONING RESUBMITTAL

BEECHWOOD HOMES
SOUTH CREEK
MIXED USE DEVELOPMENT
S COLUMBIA ST.
CHAPEL HILL, NC 27514

PROJECT NO:	082447
DATE ISSUED:	02/17/23
DESIGNED BY:	RMN
DRAWN BY:	VCS
CHECKED BY:	RMN

SHEET NAME:
UTILITY PLAN

SHEET NO:
C-403

Layout Tab Name: C-403 UTILITY PLAN
Last Saved By:JacobsJ, 2/21/2023 9:23:24 AM
W:\Srvln\DE\Dayton\Clients\Beechwood\082447 South Creek\4.0 Disciplines\Civil\Cadd\Cd\82447-UTIL.dwg Plotted By:Jacobs, Joe Plotted:February 21, 2023, 9:25:06 AM

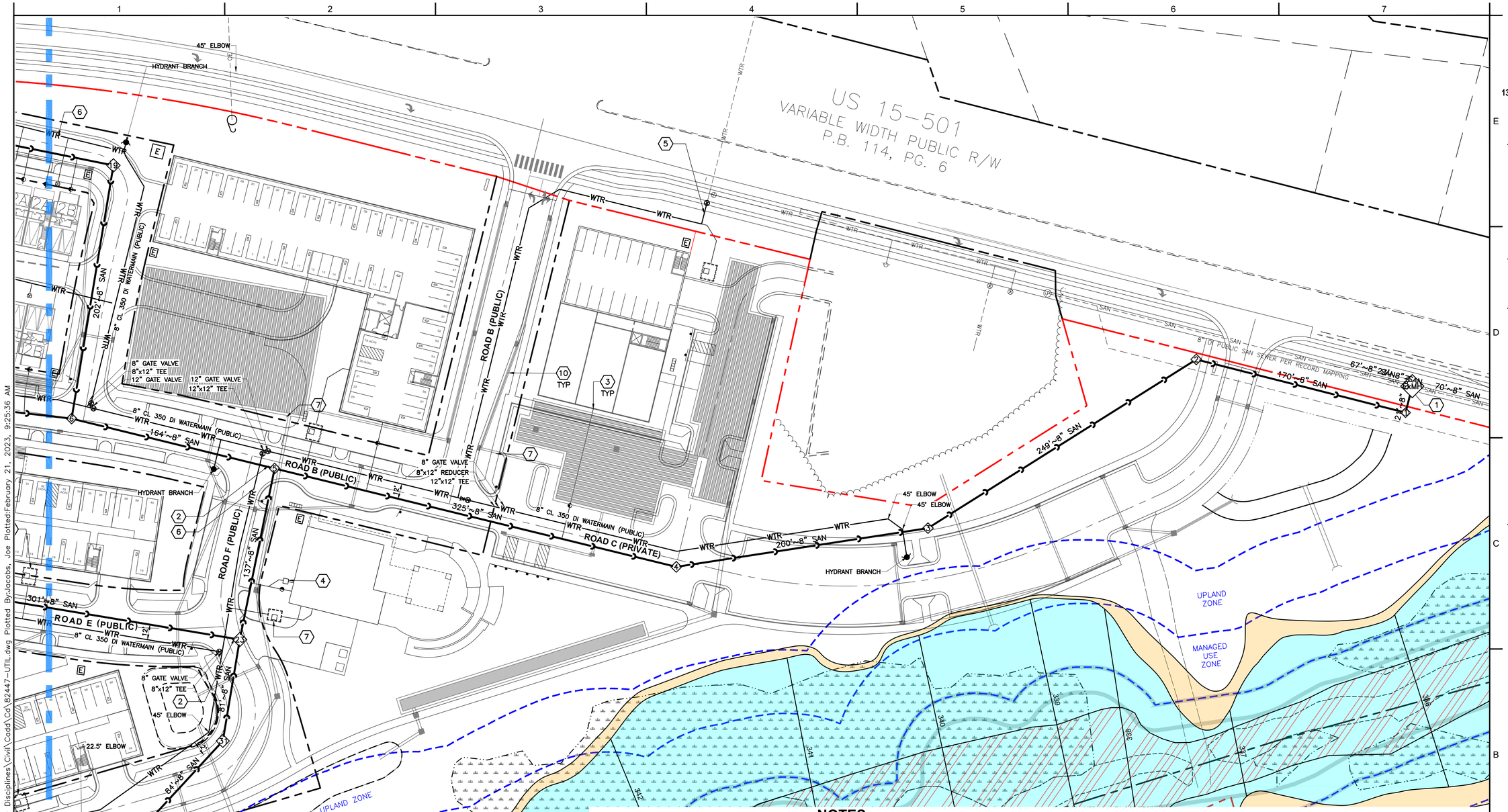

NOTES

1. SEE SHEET C-003 FOR GENERAL NOTES.
2. CONTRACTOR SHALL REFER TO OTHER PLANS WITHIN THIS CONSTRUCTION SET FOR OTHER PERTINENT INFORMATION. IT IS NOT THE ENGINEER'S INTENT THAT ANY SINGLE PLAN SHEET WITHIN THIS SET OF DOCUMENTS FULLY DEPICT ALL WORK ASSOCIATED WITH THE PROJECT.
3. REFER TO ARCHITECTURAL PLANS FOR EXACT BUILDING UTILITY ENTRANCE LOCATIONS AND MEP PLANS FOR CONTINUATION INTO BUILDING.
4. ALL WATER MAIN PIPE MATERIAL SHALL BE DUCTILE IRON CLASS 350 PER WATER DEPARTMENT REQUIREMENTS.
5. ALL SANITARY PIPE MATERIAL SHALL BE SDR 35 PER SANITARY SEWER DEPARTMENT REQUIREMENTS.
6. CONTRACTOR TO PRACTICE CAUTION WHEN WORKING IN AREA OF EXISTING UTILITIES.
7. DOMESTIC AND FIRE SERVICE BACKFLOW PREVENTERS SHALL BE INSTALLED WITHIN BUILDINGS. REFER TO MEP PLANS FOR DETAILS.
8. CONTRACTOR SHALL VERIFY LOCATION, ELEVATIONS AND CONDITION OF ALL EXISTING UTILITIES PRIOR TO CONSTRUCTION. REPORT DISCREPANCIES TO ENGINEER.
9. UNDER NO CIRCUMSTANCE SHALL THE POOL BACKWASH WATER BE DISCHARGED INTO THE STORM SEWER SYSTEM
10. DE-WATERING OF THE POOL INTO THE STORM SEWER SYSTEM IS NOT ALLOWED UNLESS DE-CHLORINATED. SALTWATER POOL DISCHARGE IS PROHIBITED. SIGNAGE TO THIS EFFECT SHALL BE PERMANENTLY AFFIXED TO THE POOL EQUIPMENT

OVERALL SITE MAP

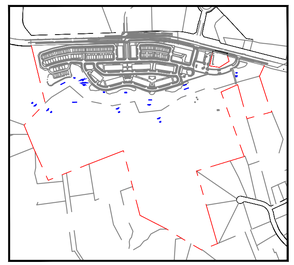

KEYNOTES (X)

1. CORE AND CONNECT TO EXISTING STRUCTURE; CONTRACTOR SHALL FIELD VERIFY THAT CONDITION OF STRUCTURE IS SUITABLE FOR MODIFICATION. IF NOT, THEN IT SHOULD BE REPLACED.
2. OUTSIDE DROP MANHOLE CONNECTION.
3. SANITARY LATERAL CONNECTION WITH CLEANOUT.
4. GREASE INTERCEPTOR.
5. CONNECT TO EXISTING 16" TEE WITH A 16" GATE VALVE.
6. DEFLECT PIPING MAXIMUM 5° TO ACHIEVE LAYOUT.
7. COMBINED SERVICE WATER METER VAULT.
8. SINGLE SERVICE WATER METER VAULT.
9. DUAL SERVICE WATER METER VAULT.
10. WATER SERVICE
11. MINIMUM 18" VERTICAL CLEARANCE AT UTILITY CROSSING

North Carolina 811
www.nc811.org

N

0 40 80 120
GRAPHIC SCALE IN FEET
1IN = 40FT

WOOLPERT
ARCHITECTURE | ENGINEERING | GEOSPATIAL
13860 Ballantyne Corporate Place, Suite 425
Charlotte, NC 28227

CIVIL PERMIT PLAN SET

ISSUANCE SCHEDULE

NUMBER	DATE	DESCRIPTION
0	07/22/22	CONDITIONAL ZONING SUBMITTAL
1	10/06/22	CONDITIONAL ZONING RESUBMITTAL
2	12/09/22	CONDITIONAL ZONING RESUBMITTAL
3	02/17/23	CONDITIONAL ZONING RESUBMITTAL

BEECHWOOD HOMES
SOUTH CREEK
MIXED USE DEVELOPMENT
S COLUMBIA ST.
CHAPEL HILL, NC 27514

PROJECT NO:	082447
DATE ISSUED:	02/17/23
DESIGNED BY:	RMN
DRAWN BY:	VCS
CHECKED BY:	RMN

SHEET NAME:
UTILITY PLAN

SHEET NO:
C-404

Layout Tab Name: C-404 UTILITY PLAN
Last Saved By:JacobsJ, 2/21/2023 9:23:24 AM
W:\Srvin\DE_Dayton\Clients\Beechwood\082447 South Creek\4.0 Disciplines\Civil\Cadd\Cd\82447-UTIL.dwg Plotted By:Jacobs, Joe Plotted:February 21, 2023, 9:25:36 AM

WOOLPERT
ARCHITECTURE | ENGINEERING | GEOSPATIAL
13860 Ballantyne Corporate Place, Suite 425
Charlotte, NC 28227

CIVIL PERMIT PLAN SET

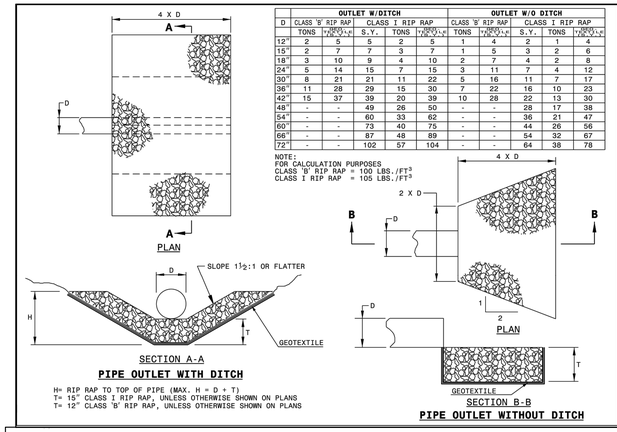

D	OUTLET W/DITCH					OUTLET W/O DITCH				
	CLASS 'B' RIP RAP		CLASS I RIP RAP			CLASS 'B' RIP RAP		CLASS I RIP RAP		
	TONS	*(SPEC. 1070-1)	S.Y.	TONS	*(SPEC. 1070-1)	TONS	*(SPEC. 1070-1)	S.Y.	TONS	*(SPEC. 1070-1)
12"	2	5	5	2	5	1	4	2	1	4
15"	2	7	7	3	7	1	5	3	2	6
18"	3	10	9	4	10	2	7	4	2	8
24"	5	14	15	7	15	3	11	7	4	12
30"	8	21	21	11	22	5	16	11	7	17
36"	11	28	29	15	30	7	22	16	10	23
42"	15	37	39	20	39	10	28	22	13	30
48"	-	-	49	26	50	-	-	28	17	38
54"	-	-	60	33	62	-	-	36	21	47
60"	-	-	73	40	75	-	-	44	26	56
66"	-	-	87	48	89	-	-	54	32	67
72"	-	-	102	57	104	-	-	64	38	78

NOTE:
FOR CALCULATION PURPOSES
CLASS 'B' RIP RAP = 100 LBS./FT³
CLASS I RIP RAP = 105 LBS./FT³

H= RIP RAP TO TOP OF PIPE (MAX. H = D + T)
T= 15" CLASS I RIP RAP, UNLESS OTHERWISE SHOWN ON PLANS
T= 12" CLASS 'B' RIP RAP, UNLESS OTHERWISE SHOWN ON PLANS

STATE OF NORTH CAROLINA DEPT. OF TRANSPORTATION DIV. OF HIGHWAYS RALEIGH, N.C.
T-13B
ROADWAY STANDARD DRAWING FOR
GUIDE FOR RIP RAP AT PIPE OUTLETS
SHEET 1 OF 1
876.02

STANDARD DETAILS
ENGINEERING DEPARTMENT

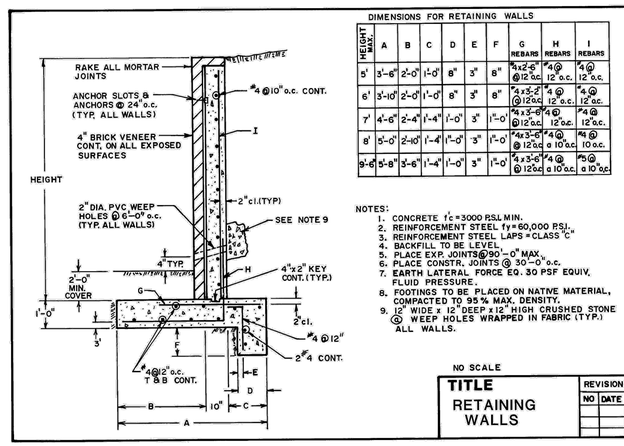

DIMENSIONS FOR RETAINING WALLS

HEIGHT	A	B	C	D	E	F	G REBARS	H REBARS	I REBARS
5'	3'-6"	2'-0"	1'-0"	8"	3"	8"	#4x2'-6" @ 12" o.c.	#4 @ 12" o.c.	#4 @ 12" o.c.
6'	3'-10"	2'-0"	1'-0"	8"	3"	8"	#4x3'-2" @ 12" o.c.	#4 @ 12" o.c.	#4 @ 12" o.c.
7'	4'-6"	2'-4"	1'-4"	1'-0"	3"	1'-0"	#4x3'-8" @ 12" o.c.	#4 @ 12" o.c.	#4 @ 12" o.c.
8'	5'-0"	2'-10"	1'-4"	1'-0"	3"	1'-0"	#4x3'-8" @ 12" o.c.	#4 @ o 10" o.c.	#4 @ 10 o.c.
9'-6"	5'-8"	3'-6"	1'-4"	1'-0"	3"	1'-0"	#4 x 3'-8" @ 12" o.c.	#4 @ o 10" o.c.	#5 @ o 10" o.c.

NOTES:
1. CONCRETE f'c = 3000 P.S.I. MIN.
2. REINFORCEMENT STEEL fy = 60,000 P.S.I.
3. REINFORCEMENT STEEL LAPS = CLASS "C"
4. BACKFILL TO BE LEVEL.
5. PLACE EXP. JOINTS @ 90'-0" MAX.
6. PLACE CONSTR. JOINTS @ 30'-0" o.c.
7. EARTH LATERAL FORCE EQ. 30 PSF EQUIV. FLUID PRESSURE.
8. FOOTINGS TO BE PLACED ON NATIVE MATERIAL, COMPACTED TO 95% MAX. DENSITY.
9. 12" WIDE x 12" DEEP x 12" HIGH CRUSHED STONE @ WEEP HOLES WRAPPED IN FABRIC (TYP.) ALL WALLS.

NO SCALE

TITLE RETAINING WALLS | REVISIONS NO DATE BY | DET.NO. ST-13

STANDARD DETAILS
ENGINEERING DEPARTMENT

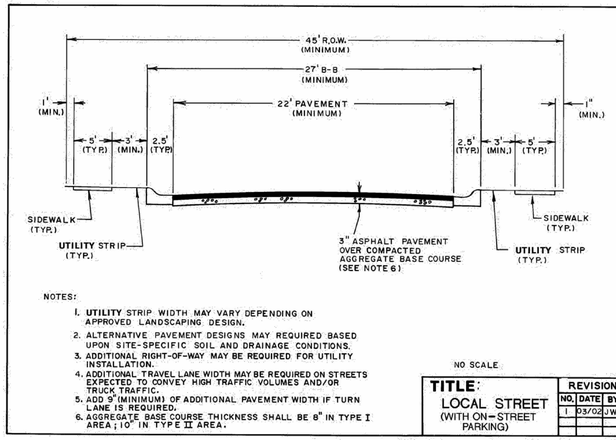

NOTES:
1. UTILITY STRIP WIDTH MAY VARY DEPENDING ON APPROVED LANDSCAPING DESIGN.
2. ALTERNATIVE PAVEMENT DESIGNS MAY REQUIRED BASED UPON SITE-SPECIFIC SOIL AND DRAINAGE CONDITIONS.
3. ADDITIONAL RIGHT-OF-WAY MAY BE REQUIRED FOR UTILITY INSTALLATION.
4. ADDITIONAL TRAVEL LANE WIDTH MAY BE REQUIRED ON STREETS EXPECTED TO CONVEY HIGH TRAFFIC VOLUMES AND/OR TRUCK TRAFFIC.
5. ADD 9' (MINIMUM) OF ADDITIONAL PAVEMENT WIDTH IF TURN LANE IS REQUIRED.
6. AGGREGATE BASE COURSE THICKNESS SHALL BE 8" IN TYPE I AREA; 10" IN TYPE II AREA.

NO SCALE

TITLE: LOCAL STREET (WITH ON-STREET PARKING) | REVISIONS NO. DATE BY: 1 03/02 JWH | DET.NO. ST-1D SH.5 of 8

STANDARD DETAILS
ENGINEERING DEPARTMENT

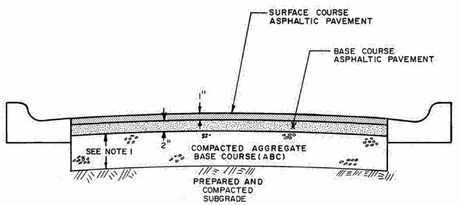

NOTE:
1. AGGREGATE BASE COURSE THICKNESS SHALL BE 8" IN TYPE I AREA; 10" IN TYPE II AREA. (SEE AREA MAP IN DESIGN MANUAL.)
2. TOWN STREETS SHALL TYPICALLY BE CONSTRUCTED USING TWO-COURSE PAVING IN ACCORDANCE WITH THE DESIGN MANUAL.

NO SCALE

TITLE: TYPICAL PAVEMENT THICKNESS FOR TYPE I AND TYPE II CONSTRUCTION AREAS | REVISIONS NO DATE BY | DET.NO. ST-1G SH. 8 of 8

STANDARD DETAILS
ENGINEERING DEPARTMENT

A. STANDARD AUTOMOBILES

A	B	C	D	D'	E	F	F'	G
0°	8.0'	N/A	12.0'	20.0'	23.0'	28.0'	36.0'	N/A
45°	8.5'	18.0'	13.0'	20.0'	12.0'	49.0'	56.0'	2.0'
60°	8.5'	19.5'	16.0'	20.0'	9.8'	55.0'	59.0'	2.5'
75°	8.5'	19.8'	20.0'	20.0'	8.8'	59.6'	59.6'	3.0'
90°	8.5'	18.5'	25.0'	25.0'	8.5'	62.0'	62.0'	3.0'

B. COMPACT AUTOMOBILES

A	B	C	D	D'	E	F	F'	G
0°	8.0'	N/A	11.0'	20.0'	19.0'	27.0'	36.0'	N/A
45°	8.0'	15.3'	11.5'	20.0'	11.3'	42.1'	50.6'	1.5'
60°	8.0'	16.3'	13.3'	20.0'	9.2'	45.9'	52.6'	1.8'
75°	8.0'	16.5'	16.0'	20.0'	8.2'	49.0'	53.0'	2.0'
90°	8.0'	15.5'	20.0'	20.0'	8.0'	51.0'	51.0'	2.0'

*ADDITIONAL WIDTH MAY BE REQUIRED WHERE THE AISLE SERVES AS A PRINCIPAL VEHICULAR ACCESS TO ON-SITE USES OR STRUCTURES OR SERVES TWO-WAY TRAFFIC.

PARKING STALLS ABUTTING SIDEWALK AND PLANTING STRIPS SHALL PROVIDE ADDITIONAL CLEARANCE BETWEEN THE STALL AND THE SIDEWALK OR PLANTING STRIP.

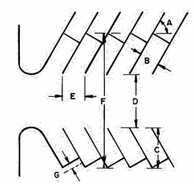

A) PARKING ANGLE
B) STALL WIDTH
C) STALL DEPTH
*D) AISLE WIDTH BETWEEN STALL LINES (ONE-WAY TRAFFIC)
E) STALL WIDTH PARALLEL TO AISLE
F) MODULE WIDTH (ONE-WAY TRAFFIC) WITH PARKING ON BOTH SIDES.
#G) VECHICLE OVERHANG
*D') TWO-WAY TRAFFIC
F') TWO-WAY TRAFFIC

TITLE LOT LAYOUT SCHEDULE | REVISIONS NO DATE BY | DET.NO P-1

STANDARD DETAILS
ENGINEERING DEPARTMENT

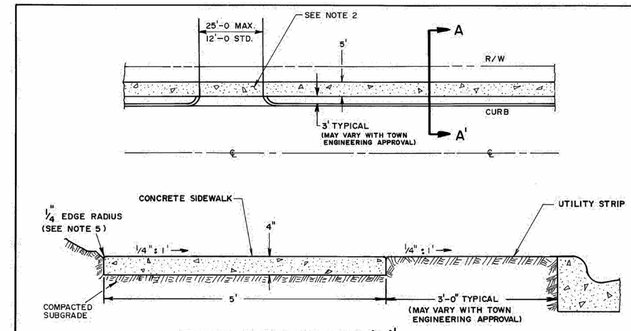

TYPICAL SIDEWALK-SECTION A-A'

NOTES:
1. ALL CONCRETE 3000 PSI.
2. SEE STANDARD DETAIL "D-1" FOR THROUGH DRIVEWAY SPECIFICATIONS.
3. EXPANSION JOINTS 50' APART MAXIMUM.
4. CONTROL JOINT EVERY 5 FEET.
5. ALL SIDEWALKS SHALL BE CONSTRUCTED WITH TOOLED 1/4" EDGE RADIUS.
6. IF UTILITY STRIP IS COMPLETELY ELIMINATED, SIDEWALK SHALL BE PLACED DIRECTLY AT BACK-OF-CURB, WITH 1/4" EDGE RADIUS.

NO SCALE

TITLE TYPICAL SIDEWALK | REVISIONS NO DATE BY | DET.NO. ST-4 SH.1 of 3

STANDARD DETAILS
ENGINEERING DEPARTMENT

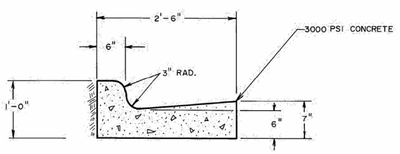

SCALE: 1" = 1'-0"

TITLE CURB & GUTTER SECTION | REVISIONS NO DATE BY | DET.NO. ST-2

STANDARD DETAILS
ENGINEERING DEPARTMENT

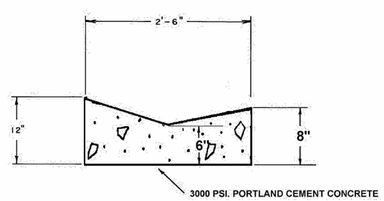

MANAGER'S PRIOR APPROVAL REQUIRED

TITLE VALLEY CURB AND GUTTER SECTION | REVISIONS NO DATE BY | DET.NO. ST-2C

STANDARD DETAILS
ENGINEERING DEPARTMENT

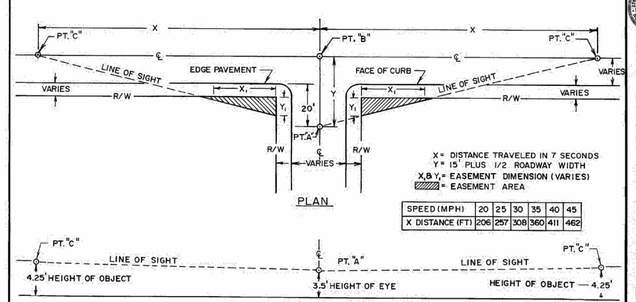

X = DISTANCE TRAVELED IN 7 SECONDS
Y = 15' PLUS 1/2 ROADWAY WIDTH
X, & Y₁ = EASEMENT DIMENSION (VARIES)
= EASEMENT AREA

SPEED (MPH)	20	25	30	35	40	45
X DISTANCE (FT)	206	257	308	360	411	462

** NOTE - WHEN THE GRADES OF THE INTERSECTION LEGS ARE OTHER THAN FLAT, CORRECTIONS SHOULD BE MADE TO SIGHT DISTANCE REQUIREMENTS AS OUTLINED BY A.A.S.H.T.O.

NO SCALE

TITLE: "TYPICAL SIGHT DISTANCE EASEMENT FOR AT-GRADE INTERSECTION OF TWO ROADS" | REVISIONS NO DATE BY | DET.NO. ST-10

STANDARD DETAILS
ENGINEERING DEPARTMENT

ISSUANCE SCHEDULE

NUMBER	DATE	DESCRIPTION
0	07/22/22	CONDITIONAL ZONING SUBMITTAL
1	10/06/22	CONDITIONAL ZONING RESUBMITTAL
2	12/09/22	CONDITIONAL ZONING RESUBMITTAL
3	02/17/23	CONDITIONAL ZONING RESUBMITTAL

BEECHWOOD HOMES
SOUTH CREEK
MIXED USE DEVELOPMENT
S COLUMBIA ST.
CHAPEL HILL, NC 27514

PROJECT NO:	082447
DATE ISSUED:	7/8/22
DESIGNED BY:	RMN
DRAWN BY:	VCS
CHECKED BY:	RMN

SHEET NAME: DETAILS

SHEET NO: **C-801**

Layout Tab Name: C-801 DETAILS
Last Saved By:Nix, 2/17/2023 2:45:13 PM
W:\Srvin\DE\Dayton\Clients\Beechwood\082447 South Creek\4.0 Disciplines\Civil\Cadd\C\82447-DET.dwg Plotted By:Jacobs, Joe Plotted:February 17, 2023, 6:53:02 PM

DetailImp-Invertec II: TRENCH WITH WELD BEST CONNAGER FIT

LOCHNER
8765 STEVENTON WAY, SUITE 200
RALEIGH, NC 27615
LICENSE NO. F-0112
NC Firm#
Number Here

NTB
2635 CROSS ROAD, SUITE 200 NC Cross
RALEIGH, NC 27610 Number Here

PROJECT REFERENCE NO.	SHEET NO.
R-2250C	20-7-6
R/W SHEET NO.	

RICHARD MICHAEL NIX
NORTH CAROLINA
PROFESSIONAL
SEAL
050394
Richard M. Nix
PROFESSIONAL ENGINEER
8/17/2022

DETAIL SHOWING PREFORMED SCOUR HOLE

PREFORMED SCOUR HOLE

*NOT TO SCALE

PLAN VIEW

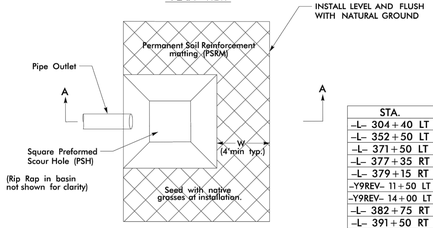

STA.	B	W	D	d
-L- 304+40 LT	5'	4'	2'	18"
-L- 352+50 LT	5'	4'	2'	18"
-L- 371+50 LT	5'	4'	2'	18"
-L- 377+35 RT	5'	4'	2'	15"
-L- 379+15 RT	5'	4'	2'	15"
-Y9REV- 11+50 LT	5'	4'	2'	15"
-Y9REV- 14+00 LT	5'	4'	2'	18"
-L- 382+75 RT	5'	4'	2'	15"
-L- 391+50 RT	5'	4'	2'	15"
-L- 398+00 RT	5'	4'	2'	15"
-L- 404+00 RT	5'	4'	2'	15"
-L- 406+00 RT	5'	4'	2'	18"
-L- 430+50 RT	5'	4'	2'	15"
-L- 452+75 RT	5'	4'	2'	18"
-L- 456+70 RT	5'	4'	2'	15"

SECTION A-A

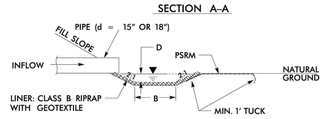

SEE SHEET 8 FOR PLAN VIEW
SEE SHEET 9 FOR PLAN VIEW
SEE SHEET 13 FOR PLAN VIEW
SEE SHEET 14 FOR PLAN VIEW
SEE SHEET 15 FOR PLAN VIEW
SEE SHEET 17 FOR PLAN VIEW
SEE SHEET 19 FOR PLAN VIEW

WOOLPERT
ARCHITECTURE | ENGINEERING | GEOSPATIAL
13860 Ballantyne Corporate Place, Suite 425
Charlotte, NC 28227

CIVIL PERMIT PLAN SET

ISSUANCE SCHEDULE

NUMBER	DATE	DESCRIPTION
-	-	-
-	-	-
2	12/09/22	CONDITIONAL ZONING RESUBMITTAL
3	02/17/23	CONDITIONAL ZONING RESUBMITTAL

BEECHWOOD HOMES
SOUTH CREEK
MIXED USE DEVELOPMENT

S COLUMBIA ST.
CHAPEL HILL, NC 27514

PROJECT NO:	082447
DATE ISSUED:	7/8/22
DESIGNED BY:	RMN
DRAWN BY:	VCS
CHECKED BY:	RMN

SHEET NAME:
DETAILS

SHEET NO:
C-802

Layout Tab Name: C-802 DETAILS
Last Saved By:Nix, 2/17/2023 2:45:13 PM
W:\Srvin\DE\Dayton\Clients\Beechwood\082447 South Creek\4.0 Disciplines\Civil\Cadd\Cd\82447-DET.dwg Plotted By:Jacobs, Joe Plotted:February 17, 2023, 6:53:11 PM

TAG	QTY	SCIENTIFIC NAME	COMMON NAME	COND.	SIZE	REMARKS
TREE						
AP	62	Aesculus pavia	Red Buckeye	B&B	1" cal. 6'ht. 4'wd	Full, well shaped
CC	80	Cercis canadensis	Eastern Redbud	B&B	1" cal. 6'ht. 3'wd	Full, well shaped
AL	79	Amelanchier laevis	Serviceberry	B&B	1" cal. 6'ht. 3'wd	Full, well shaped
NS	19	Nyssa sylvatica	Black Gum	B&B	2" cal. 6'ht. 4'wd	Full, well shaped
AR	53	Acer rubrum	Red Maple	B&B	2" cal. 6'ht. 3'wd	Full, well shaped
QP	47	Quercus pagodifolia	Cherrybark Oak	B&B	2" cal. 6'ht. 3'wd	Full, well shaped
EVERGREEN SHRUB						
IG	477	Ilex glabra	Inkberry Holly	#3 cont.	30"ht. x 24"wd.	Full, vigorous
LC	494	Lorapetalum chinense 'Rubrum'	Chinese Fringe Flower	#3 cont.	30"ht. x 24"wd.	Full, vigorous
GJ	221	Gardenia jasminoides 'Radicans'	Dwarf Gardenia	#3 cont.	36"ht. x 24"wd.	Full, vigorous
DECIDUOUS SHRUB						
CA	46	Clethra alnifolia	Summersweet Clethra	#5 cont.	36"ht. x 24"wd.	Full, vigorous
GROUNDCOVER						
SEED	+/-378,412 SF					

PERMANENT SEED BLEND

90% FINE LEAF FESCUE (FESTUCA ARUNDINACEA) REBEL, REBEL II, WRANGLER, BONANZA, MOJAVE OR EQUAL
10% KENTUCKY BLUEGRASS (POA PRATENSIS) MIDNIGHT, RUGBY II, MIDIRON VARIETIES OR EQUAL
98% PURITY AND 85% GERMINATION
95% WEED FREE

SHREDDED HARDWOOD MULCH TO 3" DEPTH, UNLESS NOTED OTHERWISE. SEE SPECIFICATIONS.

UTILITY EASEMENTS

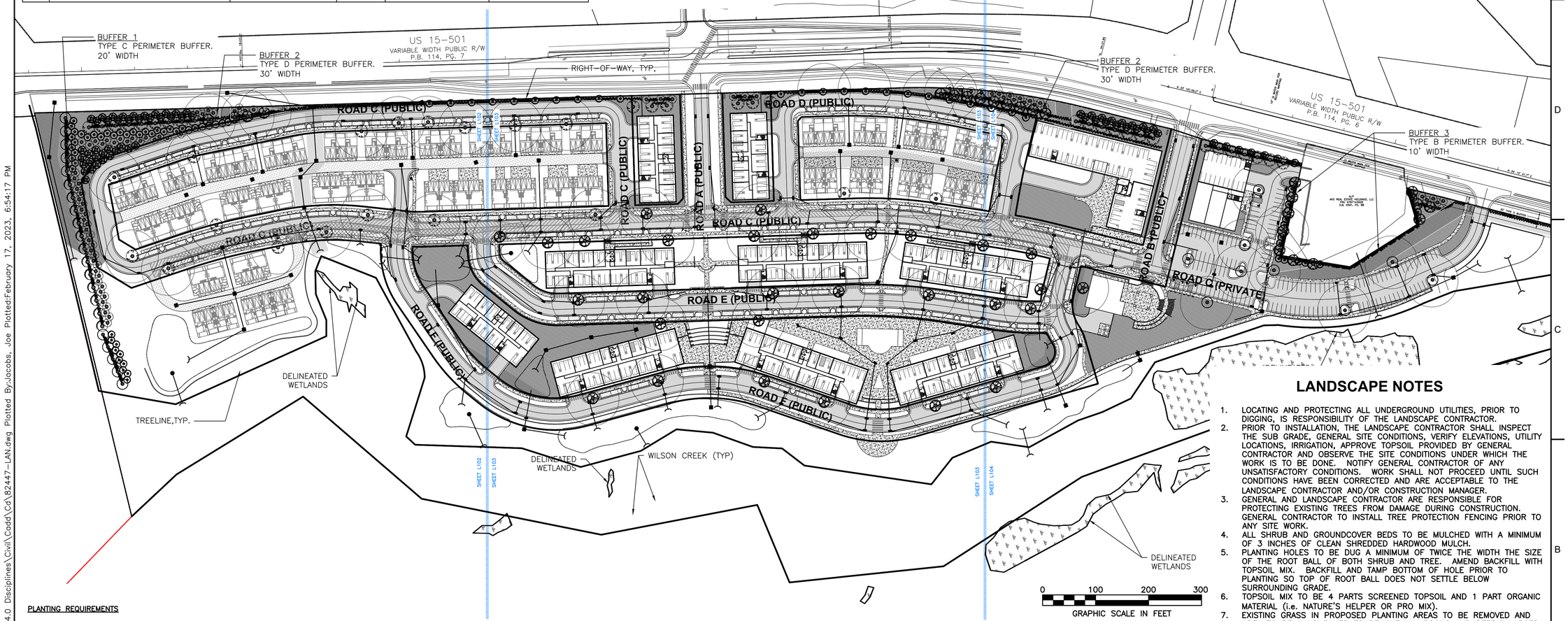

PLANTING REQUIREMENTS

PERIMETER BUFFER 1

PROPOSED USE ADJACENT TO LAND ZONING:
R-LD5, RT, R-LD1, R-1, R-2, R-3
BUFFER TYPE C REQUIRED – 20' MIN. WIDTH
(SOUTHERN PROPERTY BOUNDARY)

PLANTS REQUIRED PER 100 LF
LARGE TREES: 4
SMALL TREES: 8
SHRUBS: 30

TOTAL BUFFER LENGTH: +/-530 LF

LARGE TREES REQUIRED: 21.2
SMALL TREES REQUIRED: 42.4
SHRUBS REQUIRED: 159

LARGE TREES PROVIDED: 22
SMALL TREES PROVIDED: 50
SHRUBS PROVIDED: 180

PERIMETER BUFFER 2

PROPOSED USE ADJACENT TO ARTERIAL STREET
BUFFER TYPE D REQUIRED – 30' MIN. WIDTH
(WESTERN PROPERTY BOUNDARY)

PLANTS REQUIRED PER 100 LF
LARGE TREES: 5
SMALL TREES: 10
SHRUBS: 30

TOTAL BUFFER LENGTH: +/-2,900 LF

LARGE TREES REQUIRED: 145
SMALL TREES REQUIRED: 290
SHRUBS REQUIRED: 870

LARGE TREES PROVIDED: 44
SMALL TREES PROVIDED: 158
SHRUBS PROVIDED: 878

PERIMETER BUFFER 3

PROPOSED USE ADJACENT TO INTUITIONAL USE (CHURCH):
BUFFER TYPE B REQUIRED – 10' MIN. WIDTH
(SOUTHERN PROPERTY BOUNDARY)

PLANTS REQUIRED PER 100 LF
LARGE TREES: 4
SMALL TREES: 7
SHRUBS: 12

TOTAL BUFFER LENGTH: +/-535 LF

LARGE TREES REQUIRED: 21.4
SMALL TREES REQUIRED: 37.4
SHRUBS REQUIRED: 64.2

LARGE TREES PROVIDED: 9
SMALL TREES PROVIDED: 13
SHRUBS PROVIDED: 180

PARKING LOT SHADE TREES

1 LARGE TREE PER 2,000 SF OF PARKING AREA REQUIRED; NO SPACE SHALL BE FARTHER THAN 50' FROM LARGE TREE; PLANTING ISLAND MIN. SF FOR LARGE TREE = 200 SF

PARKING LOT AREA: +/-90,423 SF
TREES REQUIRED: 46
TREES PROVIDED: 59

LOADING AREA SCREENING

MIN. 12' WIDTH SCREENING FROM ALL PUBLIC R/W AND ADJACENT PROPERTIES

TREE CANOPY COVERAGE

SITE ACREAGE (LOT 1): +/-42.80 AC.

REQUIRED: 40% (17.12 AC.)
PROPOSED: 10.72 AC. EXISTING TREES
2.30 AC. PROPOSED TREES
TOTAL: +/-30.43% (13.02 AC.)

EXISTING TREE CANOPY

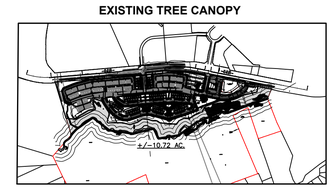

LANDSCAPE NOTES

1. LOCATING AND PROTECTING ALL UNDERGROUND UTILITIES, PRIOR TO DIGGING, IS RESPONSIBILITY OF THE LANDSCAPE CONTRACTOR.
2. PRIOR TO INSTALLATION, THE LANDSCAPE CONTRACTOR SHALL INSPECT THE SUB GRADE, GENERAL SITE CONDITIONS, VERIFY ELEVATIONS, UTILITY LOCATIONS, IRRIGATION, APPROVE TOPSOIL PROVIDED BY GENERAL CONTRACTOR AND OBSERVE THE SITE CONDITIONS UNDER WHICH THE WORK IS TO BE DONE. NOTIFY GENERAL CONTRACTOR OF ANY UNSATISFACTORY CONDITIONS. WORK SHALL NOT PROCEED UNTIL SUCH CONDITIONS HAVE BEEN CORRECTED AND ARE ACCEPTABLE TO THE LANDSCAPE CONTRACTOR AND/OR CONSTRUCTION MANAGER.
3. GENERAL AND LANDSCAPE CONTRACTOR ARE RESPONSIBLE FOR PROTECTING EXISTING TREES FROM DAMAGE DURING CONSTRUCTION. GENERAL CONTRACTOR TO INSTALL TREE PROTECTION FENCING PRIOR TO ANY SITE WORK.
4. ALL SHRUB AND GROUNDCOVER BEDS TO BE MULCHED WITH A MINIMUM OF 3 INCHES OF CLEAN SHREDDED HARDWOOD MULCH.
5. PLANTING HOLES TO BE DUG A MINIMUM OF TWICE THE WIDTH THE SIZE OF THE ROOT BALL OF BOTH SHRUB AND TREE. AMEND BACKFILL WITH TOPSOIL MIX. BACKFILL AND TAMP BOTTOM OF HOLE PRIOR TO PLANTING SO TOP OF ROOT BALL DOES NOT SETTLE BELOW SURROUNDING GRADE.
6. TOPSOIL MIX TO BE 4 PARTS SCREENED TOPSOIL AND 1 PART ORGANIC MATERIAL (i.e. NATURE'S HELPER OR PRO MIX).
7. EXISTING GRASS IN PROPOSED PLANTING AREAS TO BE REMOVED AND AREA TO BE HAND RAKED TO REMOVE ALL ROCKS AND DEBRIS LARGER THAN 1 INCH IN DIAMETER PRIOR TO PLANTING SHRUBS.
8. SOIL TO BE TESTED TO DETERMINE FERTILIZER AND LIME REQUIREMENTS. LIME AND FERTILIZER TO BE DISTRIBUTED PRIOR TO LAYING SOD. ALL DISTURBED AREAS (INCLUDING RIGHT-OF-WAYS) NOT RECEIVING PLANTINGS TO RECEIVE 4 INCHES OF TOPSOIL AND SODDED.
9. SOD TO BE DELIVERED FRESH (CUT LESS THAN 24 HOURS PRIOR TO ARRIVING ON SITE), LAID IMMEDIATELY, ROLLED AND WATERED THOROUGHLY WITHIN ONE HOUR OF INSTALLATION.
10. ALL CHANGES TO DESIGN AND/OR PLANT SUBSTITUTIONS TO BE AUTHORIZED BY LANDSCAPE ARCHITECT.
11. ALL PARKING ISLANDS TO BE BERMED UP 6"-10" WITH CLEAN FRIABLE TOPSOIL PRIOR TO PLANTING.
12. ALL LANDSCAPING SHALL BE INSTALLED IN CONFORMANCE WITH ANSI Z60.1 THE AMERICAN STANDARD FOR NURSERY STOCK, AND THE ACCEPTED STANDARDS OF AMERICANHORT.
13. THE LANDSCAPE CONTRACTOR SHALL GUARANTEE ALL PLANTS INSTALLED FOR ONE FULL YEAR FROM DATE OF ACCEPTANCE BY THE OWNER. ALL PLANTS SHALL BE ALIVE AND AT A VIGOROUS RATE OF GROWTH AT THE END OF THE GUARANTEE PERIOD. THE LANDSCAPE CONTRACTOR SHALL NOT BE RESPONSIBLE FOR ACTS OF GOD OR VANDALISM.
14. ANY PLANT THAT IS DETERMINED DEAD, IN AN UNHEALTHY OR UNSIGHTLY CONDITION, LOST ITS SHAPE DUE TO DEAD BRANCHES OR OTHER SYMPTOMS OF POOR, NON-VIGOROUS GROWTH SHALL BE REPLACED BY THE LANDSCAPE CONTRACTOR WITH THE COST OF THE REPLACEMENT INCLUDED IN THE BID OR PROPOSAL PRICE.
15. WATER THOROUGHLY TWICE IN THE FIRST 24 HOURS AND APPLY MULCH IMMEDIATELY.

WOOLPERT
ARCHITECTURE | ENGINEERING | GEOSPATIAL
13860 Ballantyne Corporate Place, Suite 425
Charlotte, NC 28227

CIVIL PERMIT PLAN SET

ISSUANCE SCHEDULE

NUMBER	DATE	DESCRIPTION

BEECHWOOD HOMES
SOUTH CREEK
MIXED USE DEVELOPMENT
S COLUMBIA ST.
CHAPEL HILL, NC 27514

PROJECT NO:	082447
DATE ISSUED:	02/17/23
DESIGNED BY:	RMN
DRAWN BY:	VCS
CHECKED BY:	RMN

SHEET NAME:
LANDSCAPE PLAN

SHEET NO:
L-101

Layout Tab Name: L-101 LANDSCAPE PLAN
Last Saved By:Jacobs, 2/17/2023 6:34:36 PM
W:\Srvin\DE\Dayton\Clients\Beechwood\082447 South Creek\4.0 Disciplines\Civil\Cadd\Cd\82447-LAN.dwg Plotted By:Jacobs, Joe Plotted:February 17, 2023, 6:54:17 PM

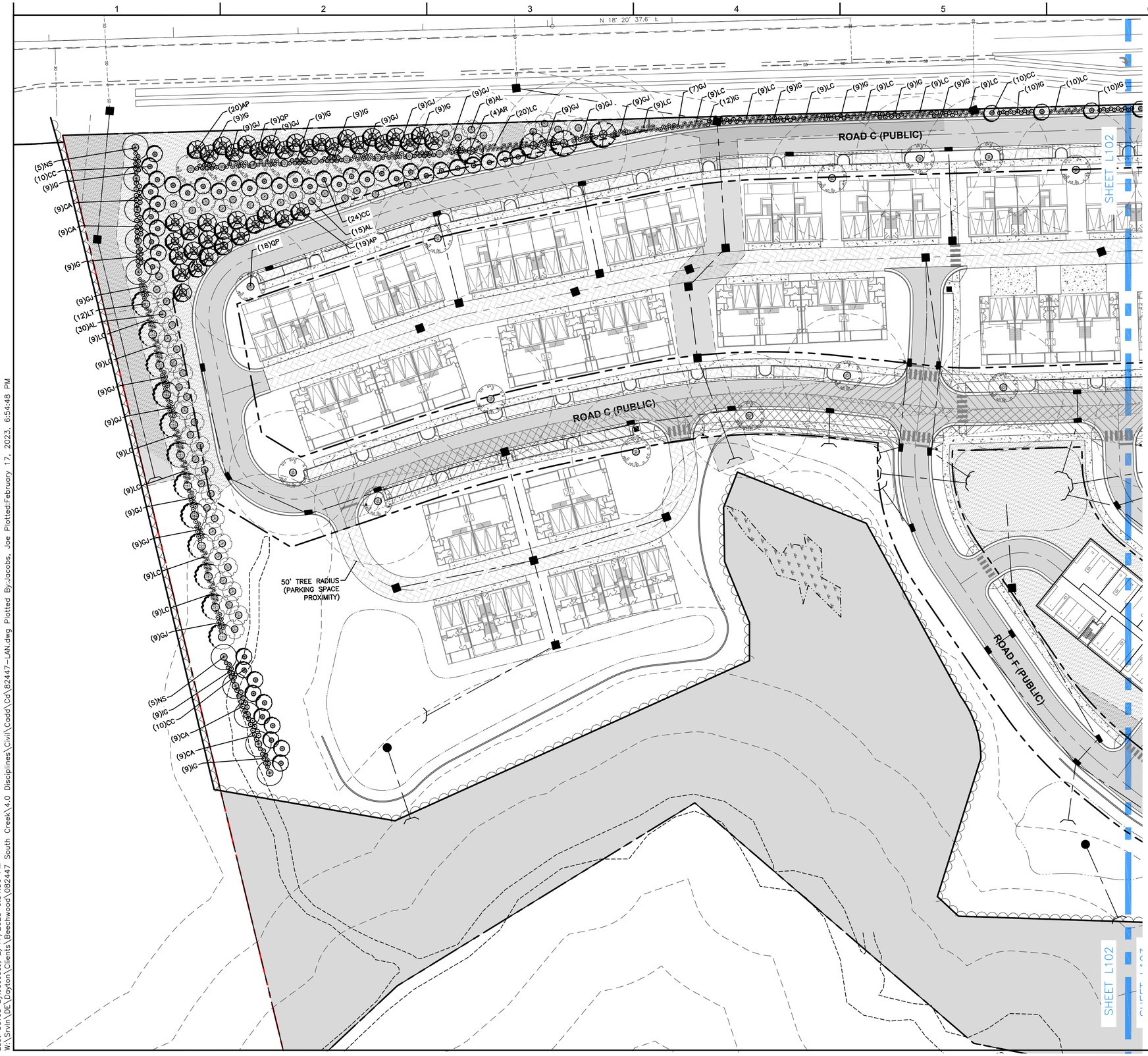

LANDSCAPE NOTES

1. LOCATING AND PROTECTING ALL UNDERGROUND UTILITIES, PRIOR TO DIGGING, IS RESPONSIBILITY OF THE LANDSCAPE CONTRACTOR.
2. PRIOR TO INSTALLATION, THE LANDSCAPE CONTRACTOR SHALL INSPECT THE SUB GRADE, GENERAL SITE CONDITIONS, VERIFY ELEVATIONS, UTILITY LOCATIONS, IRRIGATION, APPROVE TOPSOIL PROVIDED BY GENERAL CONTRACTOR AND OBSERVE THE SITE CONDITIONS UNDER WHICH THE WORK IS TO BE DONE. NOTIFY GENERAL CONTRACTOR OF ANY UNSATISFACTORY CONDITIONS. WORK SHALL NOT PROCEED UNTIL SUCH CONDITIONS HAVE BEEN CORRECTED AND ARE ACCEPTABLE TO THE LANDSCAPE CONTRACTOR AND/OR CONSTRUCTION MANAGER.
3. GENERAL AND LANDSCAPE CONTRACTOR ARE RESPONSIBLE FOR PROTECTING EXISTING TREES FROM DAMAGE DURING CONSTRUCTION. GENERAL CONTRACTOR TO INSTALL TREE PROTECTION FENCING PRIOR TO ANY SITE WORK.
4. ALL SHRUB AND GROUNDCOVER BEDS TO BE MULCHED WITH A MINIMUM OF 3 INCHES OF CLEAN SHREDDED HARDWOOD MULCH.
5. PLANTING HOLES TO BE DUG A MINIMUM OF TWICE THE WIDTH THE SIZE OF THE ROOT BALL OF BOTH SHRUB AND TREE. AMEND BACKFILL WITH TOPSOIL MIX. BACKFILL AND TAMP BOTTOM OF HOLE PRIOR TO PLANTING SO TOP OF ROOT BALL DOES NOT SETTLE BELOW SURROUNDING GRADE.
6. TOPSOIL MIX TO BE 4 PARTS SCREENED TOPSOIL AND 1 PART ORGANIC MATERIAL (i.e. NATURE'S HELPER OR PRO MIX).
7. EXISTING GRASS IN PROPOSED PLANTING AREAS TO BE REMOVED AND AREA TO BE HAND RAKED TO REMOVE ALL ROCKS AND DEBRIS LARGER THAN 1 INCH IN DIAMETER PRIOR TO PLANTING SHRUBS.
8. SOIL TO BE TESTED TO DETERMINE FERTILIZER AND LIME REQUIREMENTS. LIME AND FERTILIZER TO BE DISTRIBUTED PRIOR TO LAYING SOD. ALL DISTURBED AREAS (INCLUDING RIGHT-OF-WAYS) NOT RECEIVING PLANTINGS TO RECEIVE 4 INCHES OF TOPSOIL AND SODDED.
9. SOD TO BE DELIVERED FRESH (CUT LESS THAN 24 HOURS PRIOR TO ARRIVING ON SITE), LAID IMMEDIATELY, ROLLED AND WATERED THOROUGHLY WITHIN ONE HOUR OF INSTALLATION.
10. ALL CHANGES TO DESIGN AND/OR PLANT SUBSTITUTIONS TO BE AUTHORIZED BY LANDSCAPE ARCHITECT.
11. ALL PARKING ISLANDS TO BE BERMED UP 6"-10" WITH CLEAN FRIABLE TOPSOIL PRIOR TO PLANTING.
12. ALL LANDSCAPING SHALL BE INSTALLED IN CONFORMANCE WITH ANSI Z60.1 THE AMERICAN STANDARD FOR NURSERY STOCK, AND THE ACCEPTED STANDARDS OF AMERICANHORT.
13. THE LANDSCAPE CONTRACTOR SHALL GUARANTEE ALL PLANTS INSTALLED FOR ONE FULL YEAR FROM DATE OF ACCEPTANCE BY THE OWNER. ALL PLANTS SHALL BE ALIVE AND AT A VIGOROUS RATE OF GROWTH AT THE END OF THE GUARANTEE PERIOD. THE LANDSCAPE CONTRACTOR SHALL NOT BE RESPONSIBLE FOR ACTS OF GOD OR VANDALISM.
14. ANY PLANT THAT IS DETERMINED DEAD, IN AN UNHEALTHY OR UNSIGHTLY CONDITION, LOST ITS SHAPE DUE TO DEAD BRANCHES OR OTHER SYMPTOMS OF POOR, NON-VIGOROUS GROWTH SHALL BE REPLACED BY THE LANDSCAPE CONTRACTOR WITH THE COST OF THE REPLACEMENT INCLUDED IN THE BID OR PROPOSAL PRICE.
15. WATER THOROUGHLY TWICE IN THE FIRST 24 HOURS AND APPLY MULCH IMMEDIATELY.

OVERALL SITE MAP

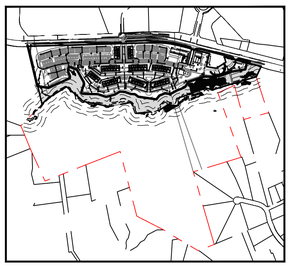

North Carolina 811
www.nc811.org

N

0 40 80 120
GRAPHIC SCALE IN FEET

WOOLPERT
ARCHITECTURE | ENGINEERING | GEOSPATIAL
13860 Ballantyne Corporate Place, Suite 425
Charlotte, NC 28227

CIVIL PERMIT PLAN SET

ISSUANCE SCHEDULE

NUMBER	DATE	DESCRIPTION

BEECHWOOD HOMES
SOUTH CREEK
MIXED USE DEVELOPMENT

S COLUMBIA ST.
CHAPEL HILL, NC 27514

PROJECT NO:	082447
DATE ISSUED:	02/17/23
DESIGNED BY:	RMN
DRAWN BY:	VCS
CHECKED BY:	RMN

SHEET NAME:
LANDSCAPE PLAN

SHEET NO:
L-102

Layout Tab Name: L-102 LANDSCAPE PLAN
Last Saved By:Jacobsj, 2/17/2023 6:34:36 PM
W:\Srvln\DE\Dayton\Clients\Beechwood\082447 South Creek\4.0 Disciplines\Civil\Cadd\Cd\82447-LAN.dwg Plotted By:Jacobs, Joe Plotted:February 17, 2023, 6:54:48 PM

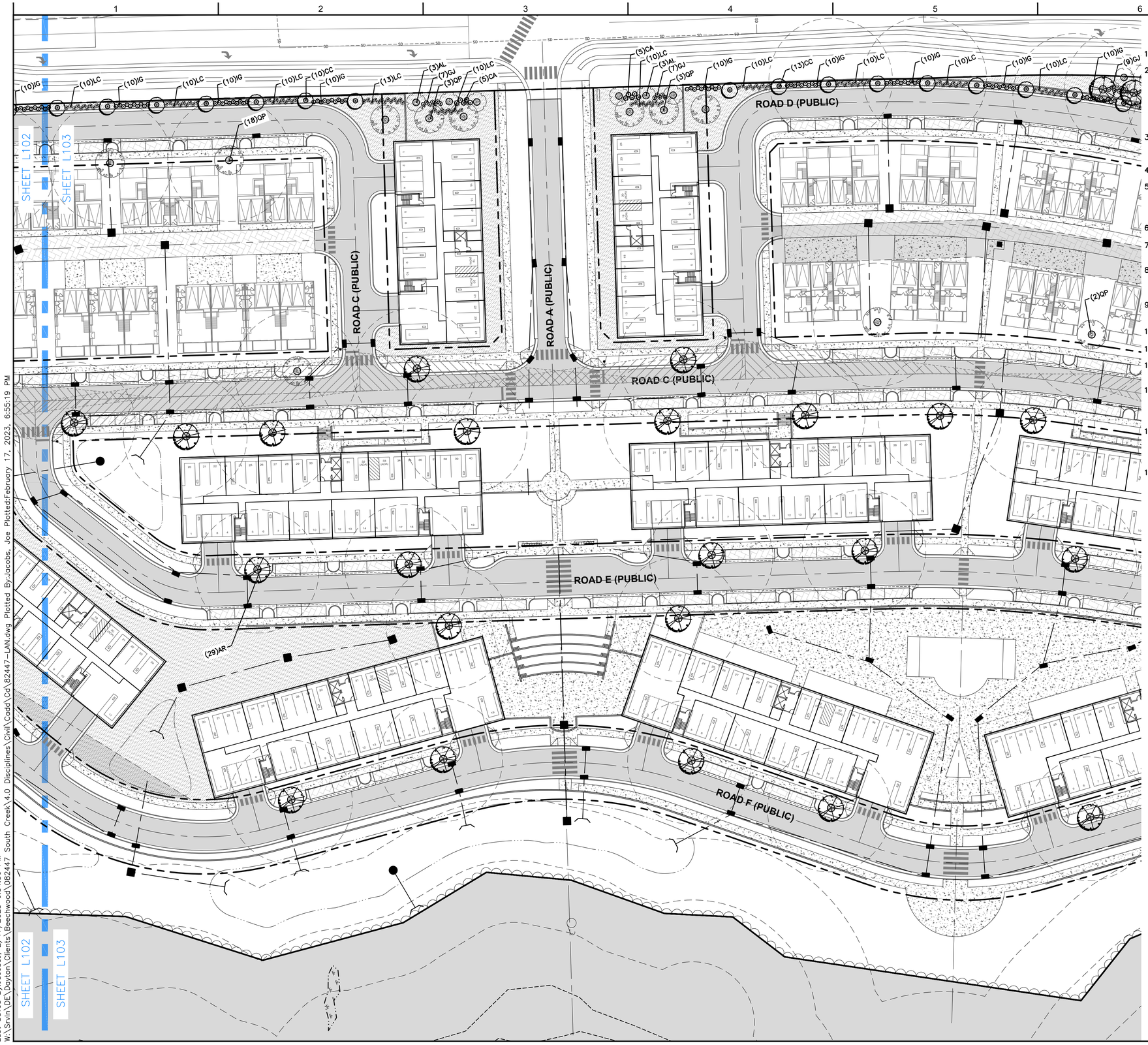

LANDSCAPE NOTES

1. LOCATING AND PROTECTING ALL UNDERGROUND UTILITIES, PRIOR TO DIGGING, IS RESPONSIBILITY OF THE LANDSCAPE CONTRACTOR.
2. PRIOR TO INSTALLATION, THE LANDSCAPE CONTRACTOR SHALL INSPECT THE SUB GRADE, GENERAL SITE CONDITIONS, VERIFY ELEVATIONS, UTILITY LOCATIONS, IRRIGATION, APPROVE TOPSOIL PROVIDED BY GENERAL CONTRACTOR AND OBSERVE THE SITE CONDITIONS UNDER WHICH THE WORK IS TO BE DONE. NOTIFY GENERAL CONTRACTOR OF ANY UNSATISFACTORY CONDITIONS. WORK SHALL NOT PROCEED UNTIL SUCH CONDITIONS HAVE BEEN CORRECTED AND ARE ACCEPTABLE TO THE LANDSCAPE CONTRACTOR AND/OR CONSTRUCTION MANAGER.
3. GENERAL AND LANDSCAPE CONTRACTOR ARE RESPONSIBLE FOR PROTECTING EXISTING TREES FROM DAMAGE DURING CONSTRUCTION. GENERAL CONTRACTOR TO INSTALL TREE PROTECTION FENCING PRIOR TO ANY SITE WORK.
4. ALL SHRUB AND GROUNDCOVER BEDS TO BE MULCHED WITH A MINIMUM OF 3 INCHES OF CLEAN SHREDDED HARDWOOD MULCH.
5. PLANTING HOLES TO BE DUG A MINIMUM OF TWICE THE WIDTH THE SIZE OF THE ROOT BALL OF BOTH SHRUB AND TREE. AMEND BACKFILL WITH TOPSOIL MIX. BACKFILL AND TAMP BOTTOM OF HOLE PRIOR TO PLANTING SO TOP OF ROOT BALL DOES NOT SETTLE BELOW SURROUNDING GRADE.
6. TOPSOIL MIX TO BE 4 PARTS SCREENED TOPSOIL AND 1 PART ORGANIC MATERIAL (i.e. NATURE'S HELPER OR PRO MIX).
7. EXISTING GRASS IN PROPOSED PLANTING AREAS TO BE REMOVED AND AREA TO BE HAND RAKED TO REMOVE ALL ROCKS AND DEBRIS LARGER THAN 1 INCH IN DIAMETER PRIOR TO PLANTING SHRUBS.
8. SOIL TO BE TESTED TO DETERMINE FERTILIZER AND LIME REQUIREMENTS. LIME AND FERTILIZER TO BE DISTRIBUTED PRIOR TO LAYING SOD. ALL DISTURBED AREAS (INCLUDING RIGHT-OF-WAYS) NOT RECEIVING PLANTINGS TO RECEIVE 4 INCHES OF TOPSOIL AND SODDED.
9. SOD TO BE DELIVERED FRESH (CUT LESS THAN 24 HOURS PRIOR TO ARRIVING ON SITE), LAID IMMEDIATELY, ROLLED AND WATERED THOROUGHLY WITHIN ONE HOUR OF INSTALLATION.
10. ALL CHANGES TO DESIGN AND/OR PLANT SUBSTITUTIONS TO BE AUTHORIZED BY LANDSCAPE ARCHITECT.
11. ALL PARKING ISLANDS TO BE BERMED UP 6"-10" WITH CLEAN FRIABLE TOPSOIL PRIOR TO PLANTING.
12. ALL LANDSCAPING SHALL BE INSTALLED IN CONFORMANCE WITH ANSI Z60.1 THE AMERICAN STANDARD FOR NURSERY STOCK, AND THE ACCEPTED STANDARDS OF AMERICANHORT.
13. THE LANDSCAPE CONTRACTOR SHALL GUARANTEE ALL PLANTS INSTALLED FOR ONE FULL YEAR FROM DATE OF ACCEPTANCE BY THE OWNER. ALL PLANTS SHALL BE ALIVE AND AT A VIGOROUS RATE OF GROWTH AT THE END OF THE GUARANTEE PERIOD. THE LANDSCAPE CONTRACTOR SHALL NOT BE RESPONSIBLE FOR ACTS OF GOD OR VANDALISM.
14. ANY PLANT THAT IS DETERMINED DEAD, IN AN UNHEALTHY OR UNSIGHTLY CONDITION, LOST ITS SHAPE DUE TO DEAD BRANCHES OR OTHER SYMPTOMS OF POOR, NON-VIGOROUS GROWTH SHALL BE REPLACED BY THE LANDSCAPE CONTRACTOR WITH THE COST OF THE REPLACEMENT INCLUDED IN THE BID OR PROPOSAL PRICE.
15. WATER THOROUGHLY TWICE IN THE FIRST 24 HOURS AND APPLY MULCH IMMEDIATELY.

OVERALL SITE MAP

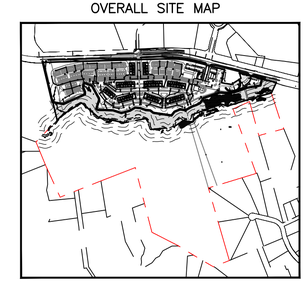

N

North Carolina 811
www.nc811.org

0 40 80 120
GRAPHIC SCALE IN FEET

WOOLPERT
ARCHITECTURE | ENGINEERING | GEOSPATIAL
13860 Ballantyne Corporate Place, Suite 425
Charlotte, NC 28227

CIVIL PERMIT PLAN SET

ISSUANCE SCHEDULE

NUMBER	DATE	DESCRIPTION

BEECHWOOD HOMES
SOUTH CREEK
MIXED USE DEVELOPMENT
S COLUMBIA ST.
CHAPEL HILL, NC 27514

PROJECT NO:	082447
DATE ISSUED:	02/17/23
DESIGNED BY:	RMN
DRAWN BY:	VCS
CHECKED BY:	RMN

SHEET NAME:
LANDSCAPE PLAN

SHEET NO:
L-103

Layout Tab Name: L-103 LANDSCAPE PLAN
Last Saved By:Jacobsj, 2/17/2023 6:34:36 PM
W:\Srvln\DE\Dayton\Clients\Beechwood\082447 South Creek\4.0 Disciplines\Civil\Cadd\Cd\82447-LAN.dwg Plotted By:Jacobs, Joe Plotted:February 17, 2023, 6:55:19 PM

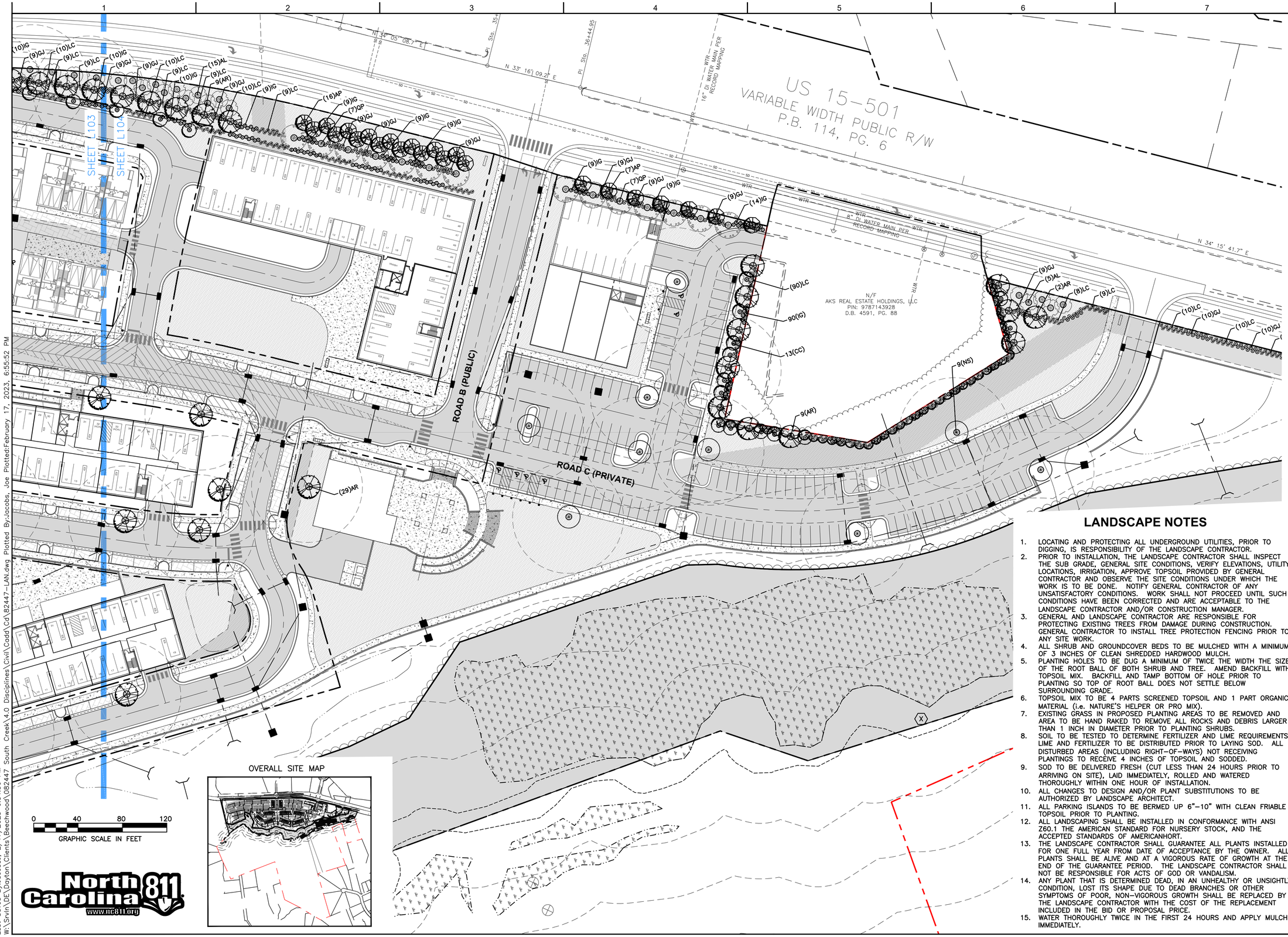

LANDSCAPE NOTES

1. LOCATING AND PROTECTING ALL UNDERGROUND UTILITIES, PRIOR TO DIGGING, IS RESPONSIBILITY OF THE LANDSCAPE CONTRACTOR.
2. PRIOR TO INSTALLATION, THE LANDSCAPE CONTRACTOR SHALL INSPECT THE SUB GRADE, GENERAL SITE CONDITIONS, VERIFY ELEVATIONS, UTILITY LOCATIONS, IRRIGATION, APPROVE TOPSOIL PROVIDED BY GENERAL CONTRACTOR AND OBSERVE THE SITE CONDITIONS UNDER WHICH THE WORK IS TO BE DONE. NOTIFY GENERAL CONTRACTOR OF ANY UNSATISFACTORY CONDITIONS. WORK SHALL NOT PROCEED UNTIL SUCH CONDITIONS HAVE BEEN CORRECTED AND ARE ACCEPTABLE TO THE LANDSCAPE CONTRACTOR AND/OR CONSTRUCTION MANAGER.
3. GENERAL AND LANDSCAPE CONTRACTOR ARE RESPONSIBLE FOR PROTECTING EXISTING TREES FROM DAMAGE DURING CONSTRUCTION. GENERAL CONTRACTOR TO INSTALL TREE PROTECTION FENCING PRIOR TO ANY SITE WORK.
4. ALL SHRUB AND GROUNDCOVER BEDS TO BE MULCHED WITH A MINIMUM OF 3 INCHES OF CLEAN SHREDDED HARDWOOD MULCH.
5. PLANTING HOLES TO BE DUG A MINIMUM OF TWICE THE WIDTH THE SIZE OF THE ROOT BALL OF BOTH SHRUB AND TREE. AMEND BACKFILL WITH TOPSOIL MIX. BACKFILL AND TAMP BOTTOM OF HOLE PRIOR TO PLANTING SO TOP OF ROOT BALL DOES NOT SETTLE BELOW SURROUNDING GRADE.
6. TOPSOIL MIX TO BE 4 PARTS SCREENED TOPSOIL AND 1 PART ORGANIC MATERIAL (i.e. NATURE'S HELPER OR PRO MIX).
7. EXISTING GRASS IN PROPOSED PLANTING AREAS TO BE REMOVED AND AREA TO BE HAND RAKED TO REMOVE ALL ROCKS AND DEBRIS LARGER THAN 1 INCH IN DIAMETER PRIOR TO PLANTING SHRUBS.
8. SOIL TO BE TESTED TO DETERMINE FERTILIZER AND LIME REQUIREMENTS. LIME AND FERTILIZER TO BE DISTRIBUTED PRIOR TO LAYING SOD. ALL DISTURBED AREAS (INCLUDING RIGHT-OF-WAYS) NOT RECEIVING PLANTINGS TO RECEIVE 4 INCHES OF TOPSOIL AND SODDED.
9. SOD TO BE DELIVERED FRESH (CUT LESS THAN 24 HOURS PRIOR TO ARRIVING ON SITE), LAID IMMEDIATELY, ROLLED AND WATERED THOROUGHLY WITHIN ONE HOUR OF INSTALLATION.
10. ALL CHANGES TO DESIGN AND/OR PLANT SUBSTITUTIONS TO BE AUTHORIZED BY LANDSCAPE ARCHITECT.
11. ALL PARKING ISLANDS TO BE BERMED UP 6"-10" WITH CLEAN FRIABLE TOPSOIL PRIOR TO PLANTING.
12. ALL LANDSCAPING SHALL BE INSTALLED IN CONFORMANCE WITH ANSI Z60.1 THE AMERICAN STANDARD FOR NURSERY STOCK, AND THE ACCEPTED STANDARDS OF AMERICANHORT.
13. THE LANDSCAPE CONTRACTOR SHALL GUARANTEE ALL PLANTS INSTALLED FOR ONE FULL YEAR FROM DATE OF ACCEPTANCE BY THE OWNER. ALL PLANTS SHALL BE ALIVE AND AT A VIGOROUS RATE OF GROWTH AT THE END OF THE GUARANTEE PERIOD. THE LANDSCAPE CONTRACTOR SHALL NOT BE RESPONSIBLE FOR ACTS OF GOD OR VANDALISM.
14. ANY PLANT THAT IS DETERMINED DEAD, IN AN UNHEALTHY OR UNSIGHTLY CONDITION, LOST ITS SHAPE DUE TO DEAD BRANCHES OR OTHER SYMPTOMS OF POOR, NON-VIGOROUS GROWTH SHALL BE REPLACED BY THE LANDSCAPE CONTRACTOR WITH THE COST OF THE REPLACEMENT INCLUDED IN THE BID OR PROPOSAL PRICE.
15. WATER THOROUGHLY TWICE IN THE FIRST 24 HOURS AND APPLY MULCH IMMEDIATELY.

WOOLPERT
ARCHITECTURE | ENGINEERING | GEOSPATIAL
13860 Ballantyne Corporate Place, Suite 425
Charlotte, NC 28227

CIVIL PERMIT PLAN SET

ISSUANCE SCHEDULE

NUMBER	DATE	DESCRIPTION

BEECHWOOD HOMES
SOUTH CREEK
MIXED USE DEVELOPMENT
S COLUMBIA ST.
CHAPEL HILL, NC 27514

PROJECT NO:	082447
DATE ISSUED:	02/17/23
DESIGNED BY:	RMN
DRAWN BY:	VCS
CHECKED BY:	RMN

SHEET NAME:
LANDSCAPE PLAN

SHEET NO:
L-104

Layout Tab Name: L-104 LANDSCAPE PLAN
Last Saved By:JacobsJ, 2/17/2023 6:34:36 PM
W:\Srvin\DE\Dayton\Clients\Beechwood\082447 South Creek\4.0 Disciplines\Civil\Cadd\Cd\82447-LAN.dwg Plotted By:Jacobs, Joe Plotted:February 17, 2023, 6:55:52 PM